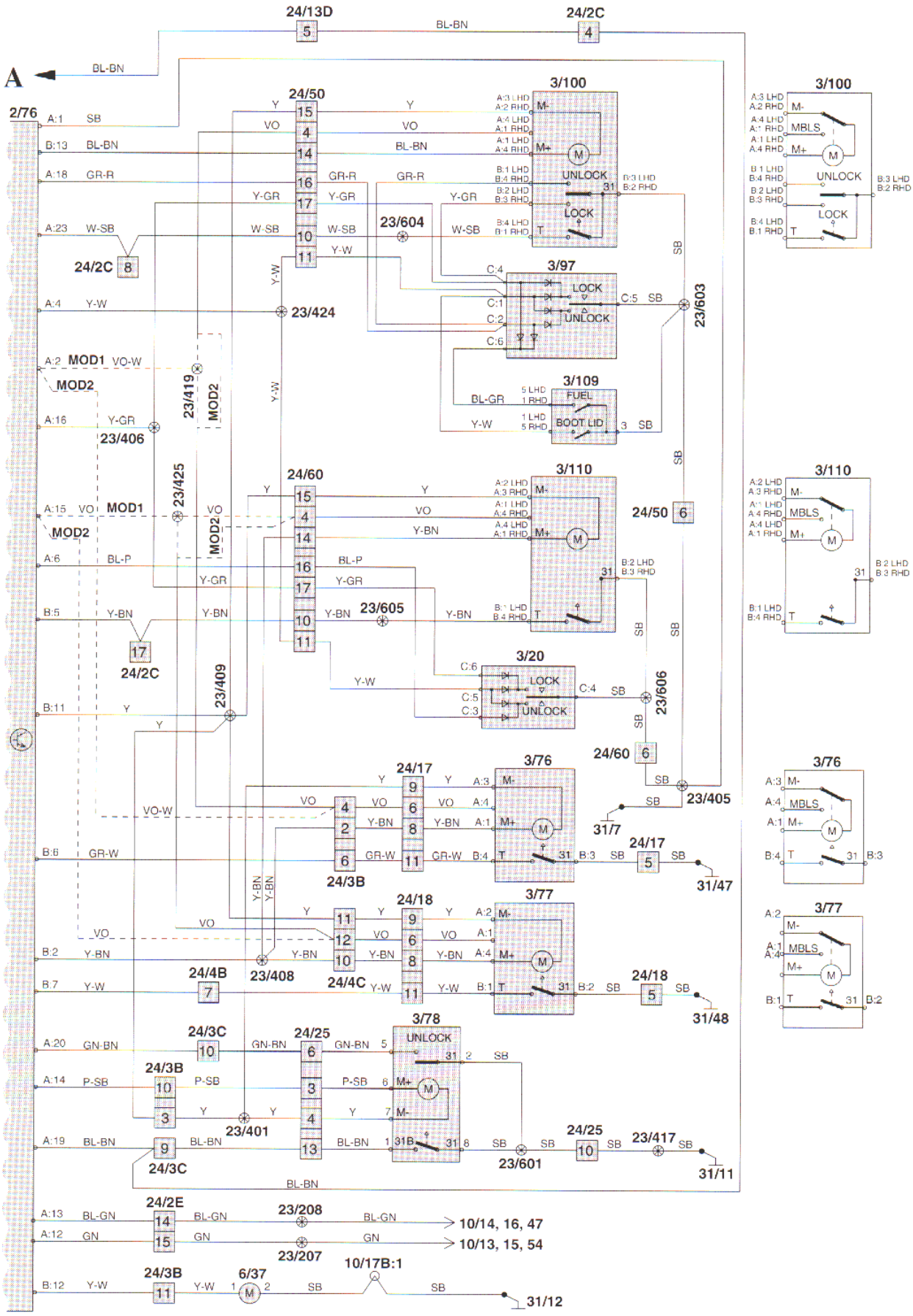
24/13D
24/2C
BL-BN
A
2/76
A:1 SB
B:13 BL-BN
A:18 GR-R
A:23 W-SB
24/2C 8
A:4 Y-W
23/424
A:2 MOD1 VO-W
MOD2
A:16 Y-GR
23/406
23/419
23/425
A:15 VO MOD1
MOD2
A:6 BL-P
B:5 Y-BN
24/2C 17
23/409
B:11 Y
B:6 GR-W
B:2 Y-BN
B:7 Y-W
24/4B 7
23/408
A:20 GN-BN
A:14 P-SB
24/3B
24/3C 10
24/3C 9
23/401
A:19 BL-BN
24/50
24/60
24/17
24/3B
24/18
24/4C
24/25
3/100
3/97
3/109
3/110
3/20
3/76
3/77
3/78
UNLOCK
LOCK
MBLS
FUEL
BOOT LID
23/604
23/603
23/605
23/606
23/405
23/417
23/601
31/7
31/47
31/48
31/11
24/2E
A:13 BL-GN
A:12 GN
23/208
23/207
10/14, 16, 47
10/13, 15, 54
24/3B
B:12 Y-W
6/37
10/17B:1
31/12