Engineering Release Notice (ERN)	Location	Change Description	A = Added D = Deleted	W = Was	Document Release Status	
D-16800-86		See DCN			RELEASED	Date / Modification Count

WIRING DIAGRAM INDEX

NAME	DESCRIPTION	PAGE
AA	POWER SUPPLY, CIRCUIT PROTECTION 1/4	3
AB	POWER SUPPLY, CIRCUIT PROTECTION 2/4	4
AC	POWER SUPPLY, CIRCUIT PROTECTION 3/4 (EF	5
AD	POWER SUPPLY, CIRCUIT PROTECTION 4/4 (EF	6
AE	GROUNDING	7
AF	STARTING AND CHARGING	8
AG	VECHILE ECU 1/4 EMS POWER CONTROL	9
AH	VECHILE ECU 2/4	10
AI	VECHILE ECU 3/4	11
AJ	VECHILE ECU 4/4 ENGINE BRAKE SWITCHES	12
AL	GROUNDING OPTIONS	13
AM	CHARGING AND POWER CABLES OPTIONS	14
AN	GROUNDING OPTIONS	15
BA	INSTRUMENTATION CLUSTER A/B	16
BB	INSTRUMENTATION CLUSTER C	17
BC	INSTRUMENTATION ROAD RELAY	18
BD	INSTRUMENTATION OPTIONAL GAUGES	19
BE	COMMUNICATIONS QUALCOMM/OMNIVISION	20
BG	COMMUNICATIONS MOBILE MAX II	21
BH	BODYBUILDER	22
BI	BODYBUILDER MODULE 2013	23
BJ	TELEMATICS GATEWAY (TGW)	24
BL	BATTERY BUSSING	25
BM	BODYBUILDER MODULE 2016	26
BP	ISX-G FUEL SYSTEM	27
CA	EITHER START/ENGINE HEATER	28
CB	ENGINE CONTROL VOLVO ENGINE	29
CC	ENGINE CONTROL ISX US13 1/2	30
CD	ENGINE CONTROL ISX US13 2/2	31
CE	FUEL FILTER HEATER	32
CH	INSIDE/OUTSIDE AIR CLEANER	33
CK	UREA DOSING SYSTEM 3/3 OBD 2013	34
CL	ENGINE CONTROL ISX-G 1/2	35
CM	METHANE DETECTION	36
CN	ENGINE CONTROL ISX US17 1/2	37
CP	ENGINE CONTROL ISX US17 2/2	38
DA	TRANSMISSION I-SHIFT	39
DB	TRANSMISSION CONTROL EATON AUTOMATICS	40
DE	TRANSMISSION CONTROL 5TH GENERATION 1/2	41
DF	TRANSMISSION CONTROL 5TH GENERATION 2/2	42
DP	PTO	43
EA	ABS CONTROL WABCO	44
EB	SUSPENSION ECU 2013	45
EC	ABS6 CONTROL BENDIX 1/3	46
ED	ABS CONTROL BENDIX ESC (ELECTRONIC STABI	47
EG	ABS8 CONTROL BENDIX 3/3	48
EH	SUSPENSION ECU 6X2 2016	49
FA	AIR DRYER/HEATED DRAIN VALVE	50
FB	LIFT AXLES VHD	51
FC	SUSPENSION DUMP, 5TH WHEEL SLIDE	52
FD	DIFFERENTIAL LOCK VN/VHD	53
FF	5TH WHEEL LOCK	54
FG	TIRE PRESSURE MONITORING SYSTEM	55

NAME	DESCRIPTION	PAGE
GA	LIGHTING CONTROL 1/2	56
GB	LIGHTING CONTROL 2/2	57
GC	MARKER LAMPS	58
GD	DRIVING LIGHTS	59
GE	DRIVING/FOG LIGHTS	60
GF	TAIL LAMPS W/ALARM	61
GG	BACK OF CAB LAMPS L1	62
GH	CABKOF CAB LAMPS L3 - L5	63
GI	SNOW PLOW AND BEACON LAMPS	64
GJ	BEACON LAMPS	65
GK	BACKUP LAMPS WITH ALARM	66
GP	WINGSHIELD WASHER	67
GQ	HORN	68
HA	CLIMATE CONTROL	69
HB	SLEEPER CLIMATE CONTROL W.LECM	70
HC	SHORE POWER	71
HD	L3 - L4 SLEEPER FUNCTIONS/LIGHTING/REFRI	72
HE	L5H4 SLEEPER FUNCTIONS	73
HH	L5H2 SLEEPER FUNCTIONS/LIGHTING/REFRIGER	74
HI	CAB MNT. INVERTER W/SHORE POWER	75
HJ	AUXILIARY 12V PARK COOLING SYSTEM 1/2	76
IA	INTERIOR COURTESY LIGHTS	77
IB	HEATED SEATS/SEATBELT REMINDER/HEATED WI	78
IC	POWER WINDOWS/MIRRORS W.DCP	79
IE	POWER WINDOWS / MIRRORS WITH TURN SIGNAL	80
IF	CENTRAL / REMOTE DOOR LOCKING	81
IG	CIGAR LIGHTER / AUX POWER (DASH RADIO SH	82
IH	BRIGHTWORK	83
JA	SRS AIRBAG CONTROL	84
JD	STEERING WHEEL MODULE / MARKER INTERRUPT	85
JE	ADAPTIVE CRUISE CONTROL / FUSION	86
JF	SIDE OBJECT DETECTION SYSTEM	87
JG	LANE DEPARTURE WARNING SYSTEM	88
JH	BENDIX FUSION	89
KA	AUDIO SYSTEM:GLAD RADIO 4 SPEAKERS	90
KB	AUDIO SYSTEM: GLAD RADIO - 6 SPEAKERS	91
KC	AUDIO SYSTEM - GLAD RADIO 6 SPEAKERS W/S	92
KD	AUDIO SYSTEM - BLUETOOTH/AUX//USB	93
KE	AUDIO SYSTEM: DEA 500 SERIES RADIO - 4 S	94
KF	AUDIO SYSTEM: DEA 500 SERIES RADIO - 6 S	95
KG	AUDIO SYSTEM - DEA 500 SERIES RADIO - 6	96
KH	AUDIO SYSTEM: DEA 500 SERIES RADIO JUMPE	97
MA	TRAILER CABLE	98
MB	TRAILER CABLE OPTIONS	99
MC	TRAILER CABLES/BODY BUILDER OPTIONS	100
NA	AUXILIARY SWITCHES	101
ND	H. D. POWER LIFT GATE	102
XA	DIAGNOSTICS 1/3 (DL4 - J1587 & DL2 - J22	103
XB	DIAGNOSTICS 2/3 (DL1 - J1939)	104
XC	DIAGNOSTICS 3/3 (DL3-J1939)	105
XD	DIAGNOSTICS 2/3 (DL1 - J1939)	106
XE	DIAGNOSTICS 2/3 (DL1 - J1939)	107
XF	DIAGNOSTICS 4/4 CUMMINS 2016/2017 (DL10)	108

The copying, distribution and utilization of this document as well as the communication of its contents to others without expressed authorization is prohibited. Offenders will be held liable for payment of damages. All rights reserved in the event of the grant of a patent, utility model or ornamental design registration.

Document title

12V SCHEMATIC VOLVO

VOLVO

Group Trucks Technlogy

The legal owner of this document is as stated under "Design Location" in KOLA and in the associated "Part Version Report"

Document type

PRODUCT SCHEMATICS

Document No	Issue	Volume	Sheet No
21849527	08	1 (2)	1 (108)

ABBREVIATION LIST, 12V

SHELL_CAVITY	HARNESSES	WHERE_USED
6SABS	REAR_CHASSIS_EXTENSION	FRONT_CHASSIS
A57	AUTOTRANS_CAB	AUTOTRANS_CAB
ABS_OPTION	MAIN_CAB	
ABS_X1	MAIN_CAB	ABS_JUMPER
ABS_X2	MAIN_CAB	ABS_JUMPER
ALLISON	AUTOTRANS_TRANS	AUTOTRANS_CAB
ATTR	AUTOTRANS_CAB	AUTOTRANS_TRANS
BBCAB_TRANS	BODY_BUILDER_CAB	BODY_BUILDER_CHASSIS
BBMCO	MAIN_CAB	BODY_BUILDER_CAB
BPMCFC	BODYPOWER_CAB	BODYPOWER_FRONTCHASSIS
BWFC	BRAKE_WEAR_FRONT	FRONT_CHASSIS
BWRC	FRONT_CHASSIS	BRAKE_WEAR_REAR
CBBFCBB	BODY_BUILDER_CHASSIS	BODY_BUILDER_CAB
CDPF	FRONT_CHASSIS	RH_STANTION
CLN_PWR	CLEAN_POWER	FRONT_CHASSIS
DRL_OR_BB	MAIN_CAB	DRL_OVERRIDE_SWITCH
DRL_OR_DCL	BODY_BUILDER_CAB	DRL_OVERRIDE_SWITCH
DRL_OR_DCL2	BODY_BUILDER_CAB	DRL_OVERRIDE_SWITCH
DS_PTO	BODY_BUILDER_CHASSIS_PTO	BODY_BUILDER_CAB
DSFC	DS_HARNESS	REAR_CHASSIS_EXTENSION
DSFRT	DS_HARNESS	DS_HARNESS_EXT_MERITOR
DSRR	DS_HARNESS	DS_HARNESS_EXT_MERITOR
DUAL_PTO	SOLENOID_SW	BODY_BUILDER_CAB
FCATR	AUTOTRANS_TRANS	
FCBL	FRONT_CHASSIS	BODY_BUILDER_CHASSIS
FCCE	FRONT_CHASSIS	REAR_CHASSIS_EXTENSION
FCCP	CLN_PWR_ACM	FRONT_CHASSIS
FCCPBB	CLN_PWR_BB	BODY_BUILDER_CAB
FCEIC	FRONT_CHASSIS	
FCFH	FRONT_CHASSIS	FUEL_HEATER
FCLA	FRONT_CHASSIS	LIFT_AXLE
FCSH	FRONT_CHASSIS	STANTION_HARNESS
FCSP	REAR_CHASSIS_EXTENSION	AIR SOLENOID PACK
FCTR	FRONT_CHASSIS	TRANSMISSION
FCUT	UREA_TANK	UREA_TANK_EXTENSION
FCUTEXT	FRONT_CHASSIS	UREA_TANK_EXTENSION
FRC1	MAIN_CAB	
FRC2	MAIN_CAB	
FRC3	MAIN_CAB	
HN_REM	MAIN_CAB	BODY_BUILDER_CAB
HOOKUP_LP	MAIN_CAB	
ILLUM_OPT	MAIN_CAB	
ILLUM_OPT2	CAMERA_SWITCH	
ILLUM_OPT3	CAMERA_SWITCH	
ILLUM_OPT4	MAIN_CAB	DRL_OVERRIDE_SWITCH
ILLUM_OPT5	MAIN_CAB	DRL_OVERRIDE_SWITCH

SHELL_CAVITY	HARNESSES	WHERE_USED
ILLUM_OPT6	MAIN_CAB	PARKER_PTO_OVERLAY
ILLUM_OPT7	MAIN_CAB	PARKER_PTO_OVERLAY
LHCS	FRONT_CHASSIS	STANTION_HARNESS
MC_DUAL_PTO	MAIN_CAB	SOLENOID_SW
MC_SOL_SW	MAIN_CAB	SOLENOID_SW
MCAATS	MAIN_CAB	AIR_TEMP_SENSOR
MCAF	MAIN_CAB	AUX_FAN
MCAF2	MAIN_CAB	AUX_FAN
MCAS	MAIN_CAB	AIR_SWITCH
MCAT	MAIN_CAB	AUTOTRANS_CAB
MCDO	MAIN_CAB	DRL_OVERRIDE_SWITCH
MCFC	MAIN_CAB	FRONT_CHASSIS
MCFCAF	MAIN_CAB	FRONT_CHASSIS
MCFG	MAIN_CAB	FUEL_GAUGE_JUMPER
MCMSO	MAIN_CAB	MIRROR_SWITCH_OVERLAY
MCPM	MAIN_CAB	PWR_MIRROR_CAB
MCRF1	MAIN_CAB	ROOF
MCRF2	MAIN_CAB	ROOF
MCRF3	MAIN_CAB	ROOF
MCRF4	MAIN_CAB	ROOF
MCTL	TAIL_LAMP	TAIL_LAMP_EXT
MCTL1	REAR_CHASSIS_EXTENSION	TAIL_LAMP_EXT
PB_START	PBSTART_HARNESS	
PMP_DRV	BODY_BUILDER_CAB	SOLENOID_SW
PPCO	PARKER_PTO_OVERLAY	AUTOTRANS_CAB
PTO_DCL_A	BODY_BUILDER_CAB	
PTO_DCL_B	BODY_BUILDER_CAB	
RC1	MAIN_CAB	
RC2	BODY_BUILDER_CAB	
RC3	AUX_FAN	
RC4	MAIN_CAB	BODY_BUILDER_CAB
RC5	MAIN_CAB	MIRROR_SWITCH_OVERLAY
RFH	ROOF	ROOF_HEADLINER
RHGJ	ROOF	GLAD_JUMPER
RHGJ1	ROOF	GLAD_JUMPER
SHAR	STANTION_HARNESS	AIR_FILTER_RESTRICTION
SP_BAT1	MAIN_CAB	
SP_IGN1	MAIN_CAB	
SP_IGN2	MAIN_CAB	BODY_BUILDER_CAB
SP_IGN3	MAIN_CAB	
SP_RLY1	MAIN_CAB	BODY_BUILDER_CAB
SP_RLY2	MAIN_CAB	BODY_BUILDER_CAB
SP_RLY53	MAIN_CAB	
SP_RLY53_87A	MAIN_CAB	
TLBU	TAIL_LAMP	BACKUP_ALARM
TRPTO	AUTOTRANS_TRANS	PTO

POWER SUPPLY, CIRCUIT PROTECTION 1/4

WIRING DIAGRAM: AA

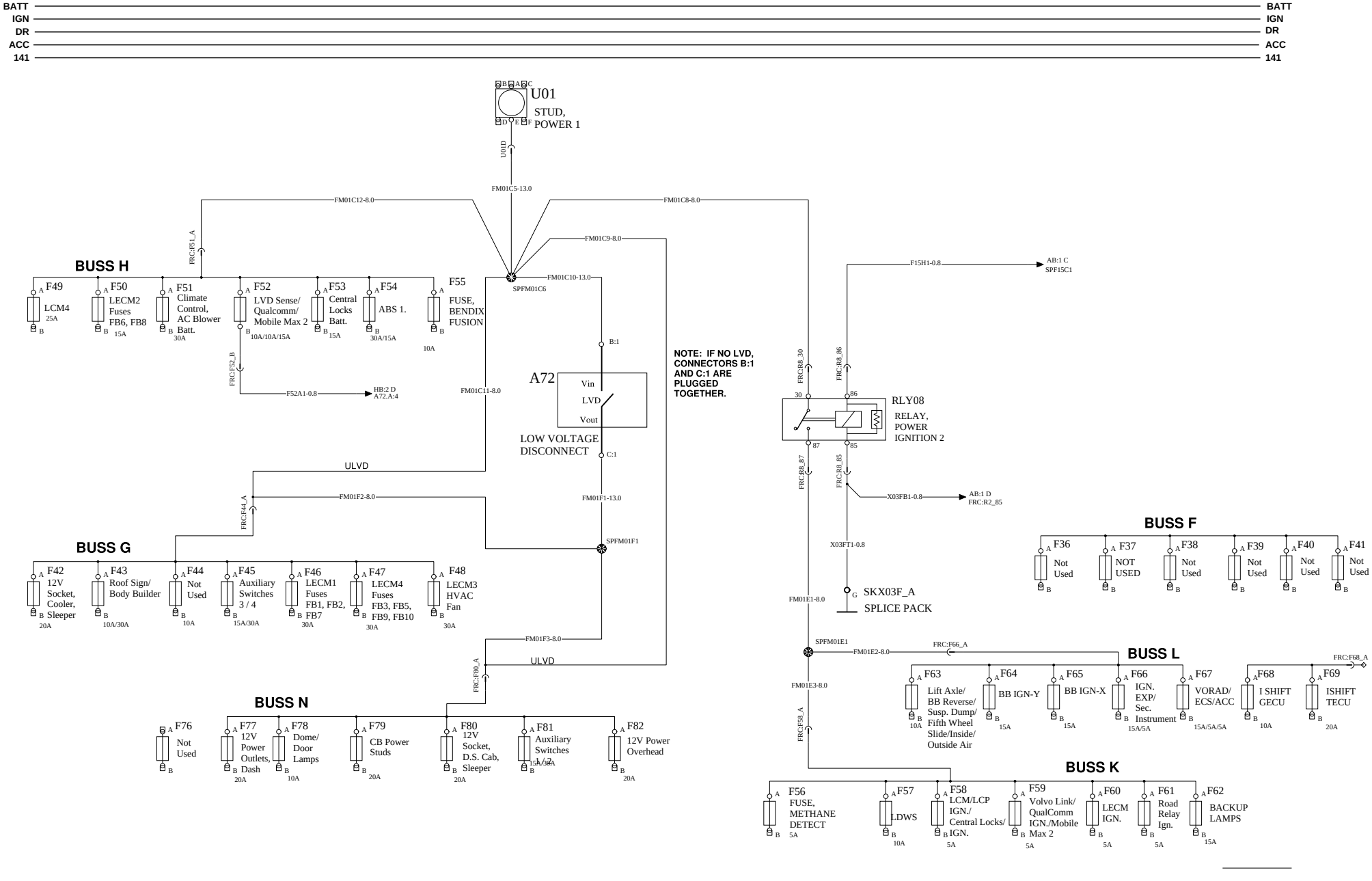

VOLVO Group Trucks Technology	Document title: 12V SCHEMATIC VOLVO Document type: PRODUCT SCHEMATIC	Document No: 21849527	Issue: 08	Volume: 1 (2)	Page: 3 (108)

POWER SUPPLY, CIRCUIT PROTECTION 2/4

WIRING DIAGRAM :AB

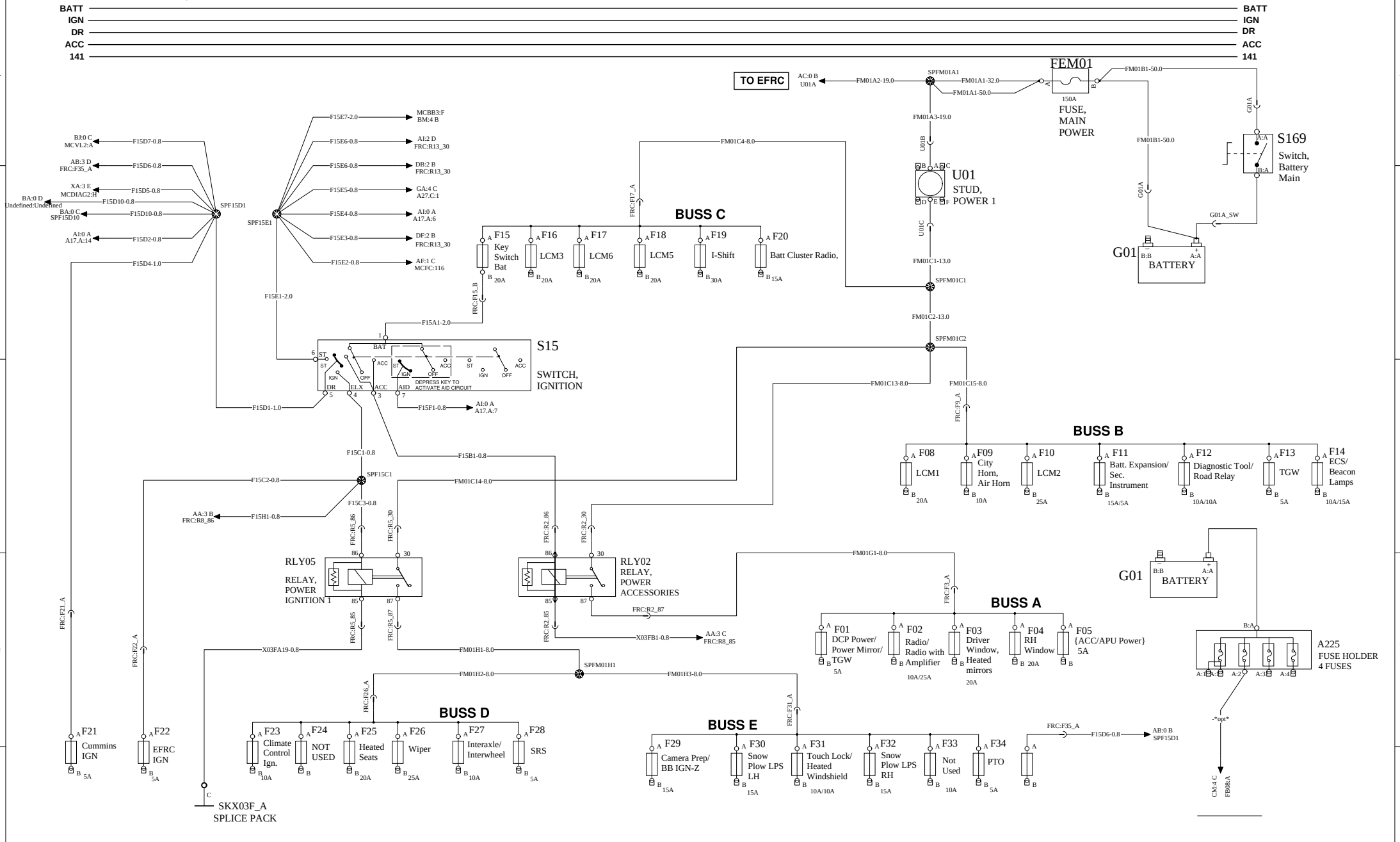

VOLVO Group Trucks Technology	Document title: 12V SCHEMATIC VOLVO Document type: PRODUCT SCHEMATIC	Document No: 21849527	Issue: 08	Volume: 1 (2)	Page: 4 (108)

POWER SUPPLY, CIRCUIT PROTECTION 3/4 (EFRC)

WIRING DIAGRAM :AC

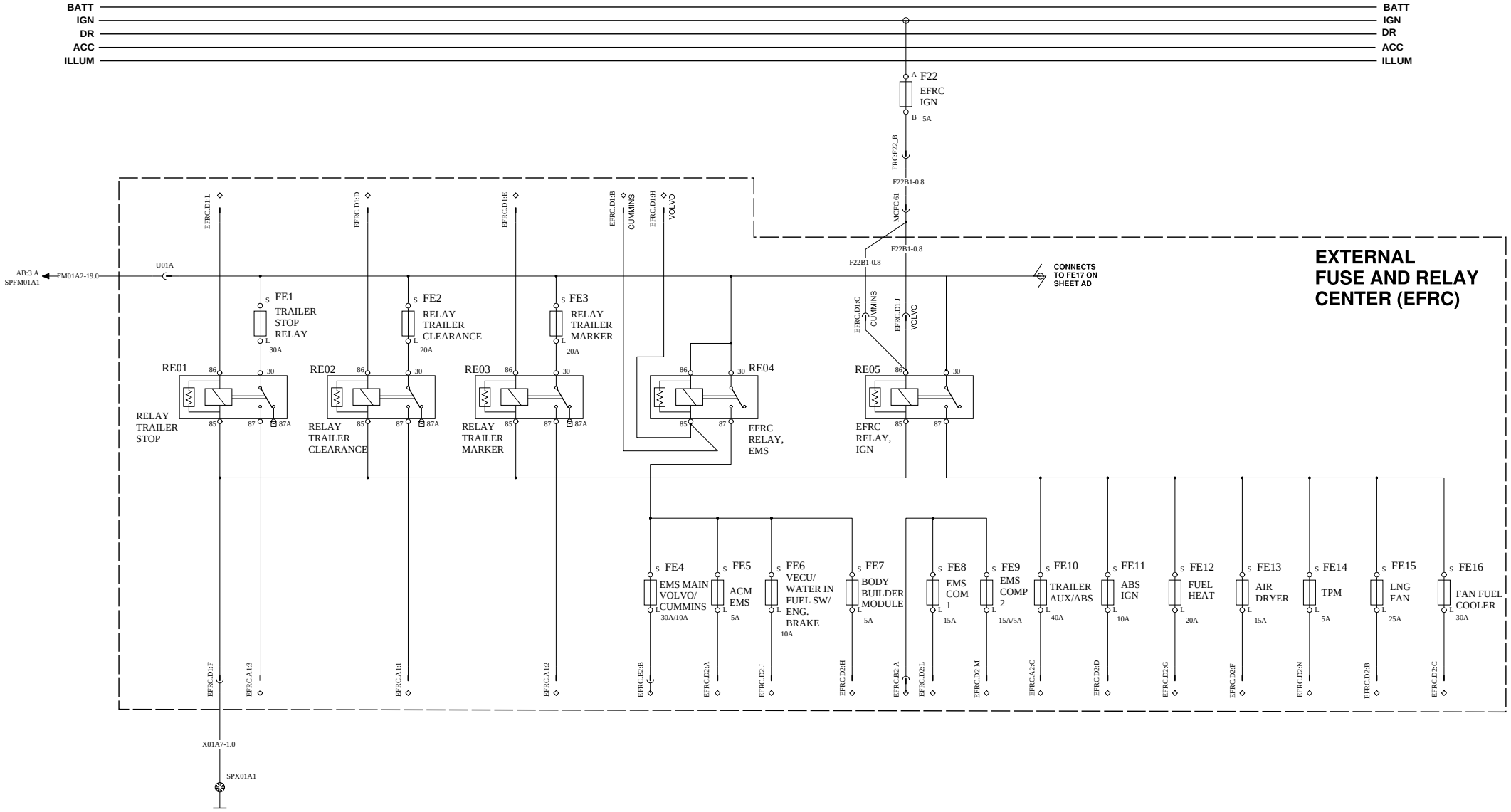

VOLVO Group Trucks Technology	Document title 12V SCHEMATIC VOLVO	Document No	Issue	Volume	Page
	Document type PRODUCT SCHEMATIC	21849527	08	1 (2)	5 (108)

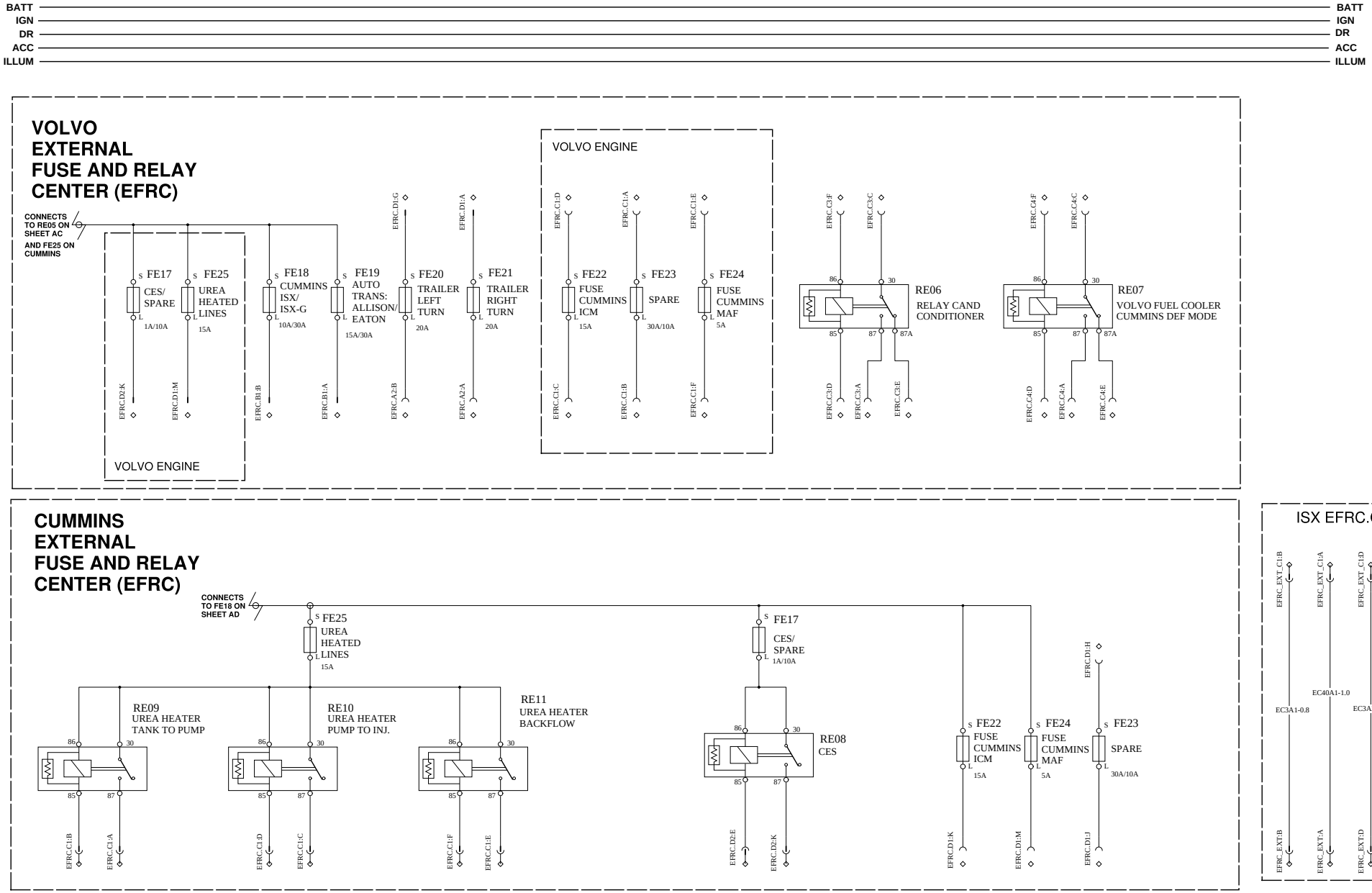

VOLVO Group Trucks Technology	Document title: 12V SCHEMATIC VOLVO Document type: PRODUCT SCHEMATIC	Document No: 21849527	Issue: 08	Volume: 1 (2)	Page: 6 (108)

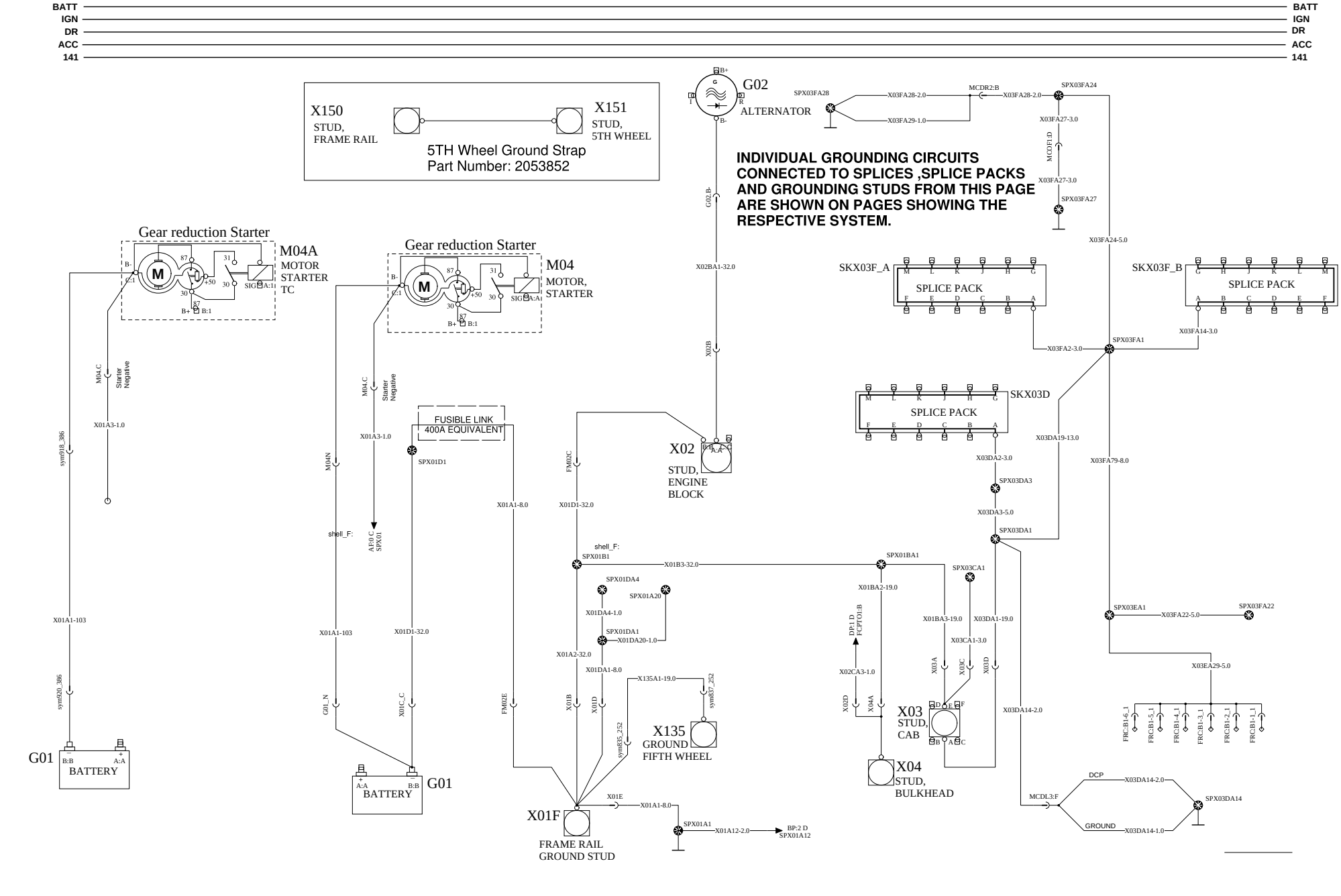

VOLVO Group Trucks Technology	Document title 12V SCHEMATIC VOLVO Document type PRODUCT SCHEMATIC	Document No 21849527	Issue 08	Volume 1 (2)	Page 7 (108)

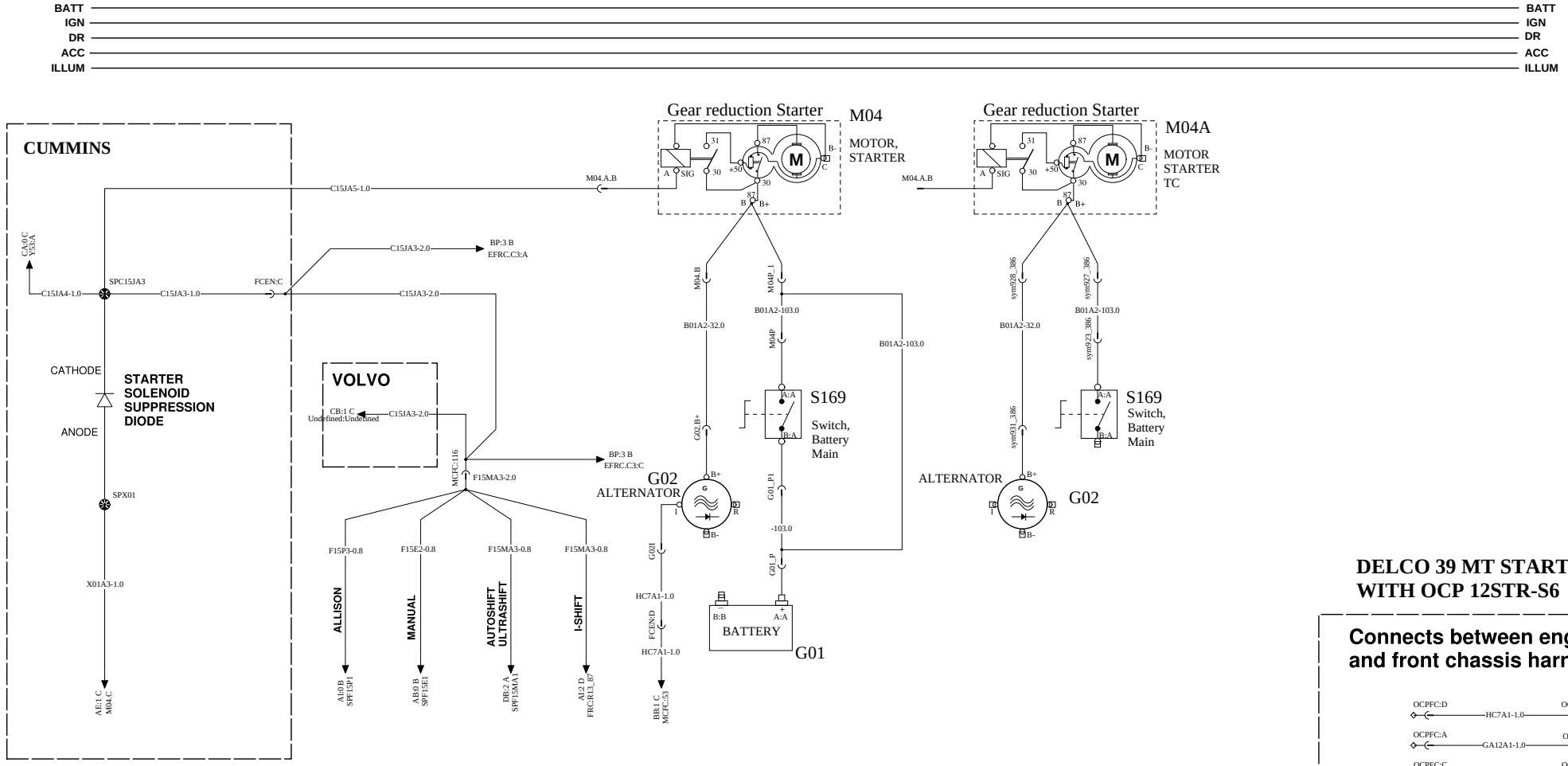

DELCO 39 MT STARTER WITH OCP 12STR-S6

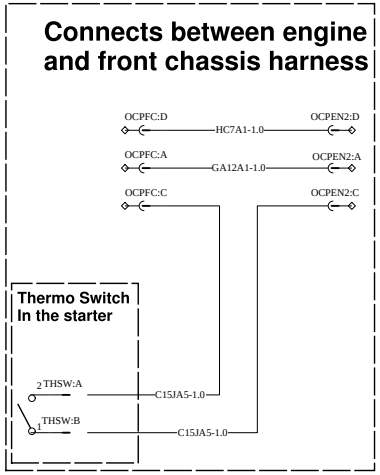

VECHILE ECU 1/4 EMS POWER CONTROL

WIRING DIAGRAM :AG

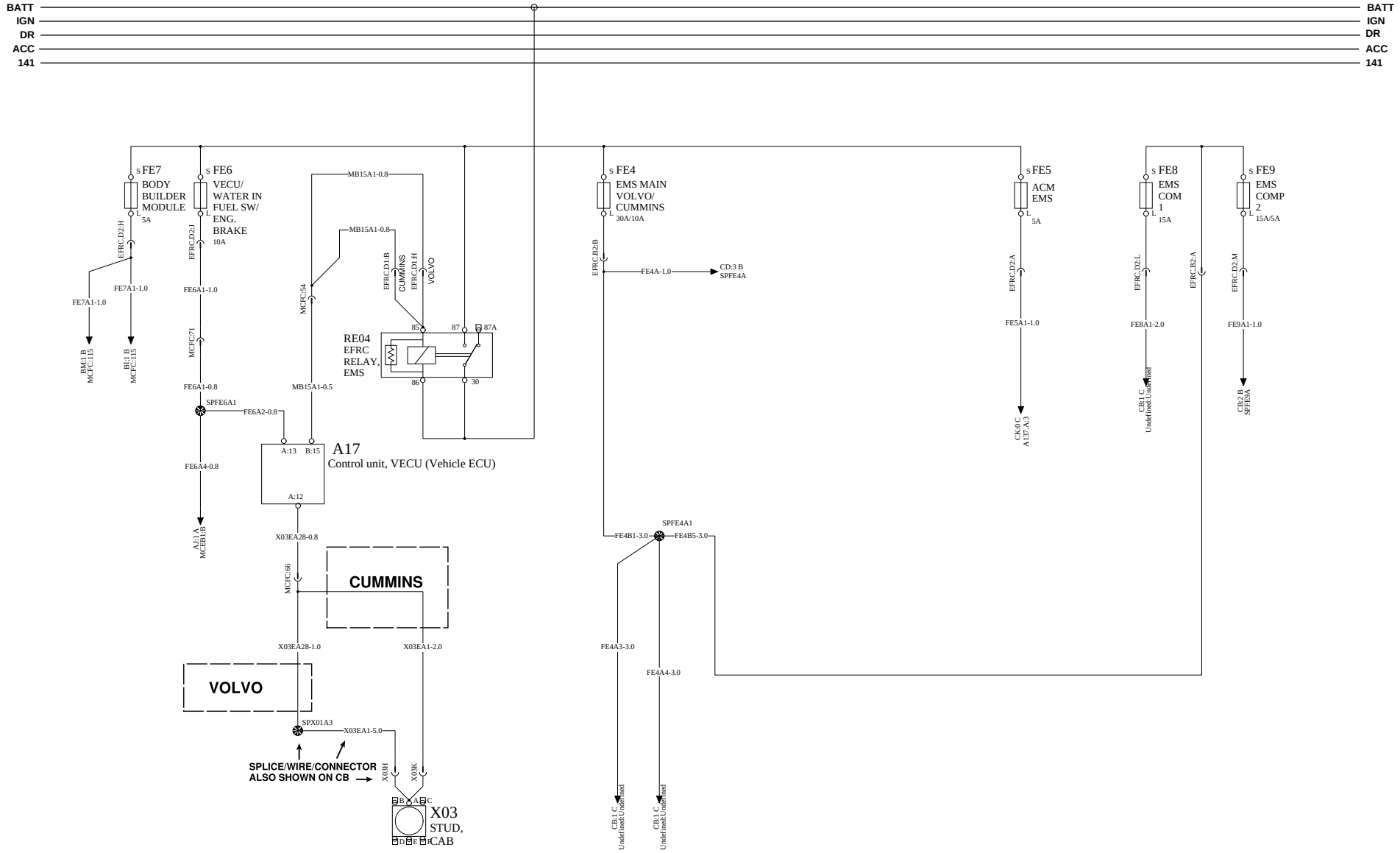

VOLVO Group Trucks Technology	Document title 12V SCHEMATIC VOLVO Document type PRODUCT SCHEMATIC	Document No 21849527	Issue 08	Volume 1 (2)	Page 9 (108)

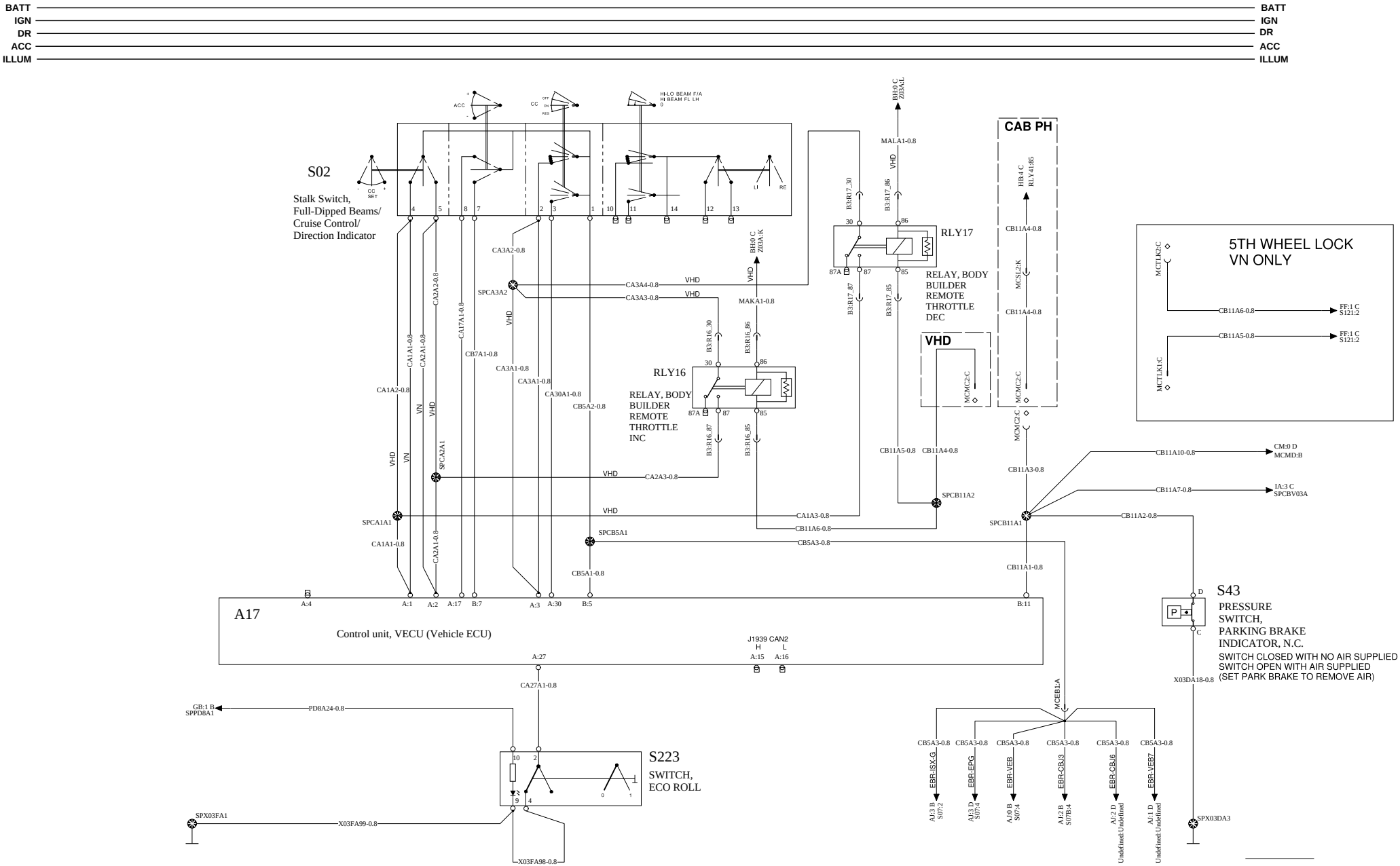
BATT
IGN
DR
ACC
ILLUM
S02
Stalk Switch, Full-Dipped Beams/ Cruise Control/ Direction Indicator
RLY17
RELAY, BODY BUILDER REMOTE THROTTLE DEC
RLY16
RELAY, BODY BUILDER REMOTE THROTTLE INC
CAB PH
VHD
5TH WHEEL LOCK VN ONLY
S43
PRESSURE SWITCH, PARKING BRAKE INDICATOR, N.C.
SWITCH CLOSED WITH NO AIR SUPPLIED
SWITCH OPEN WITH AIR SUPPLIED
(SET PARK BRAKE TO REMOVE AIR)
A17
Control unit, VECU (Vehicle ECU)
J1939 CAN2
S223
SWITCH, ECO ROLL

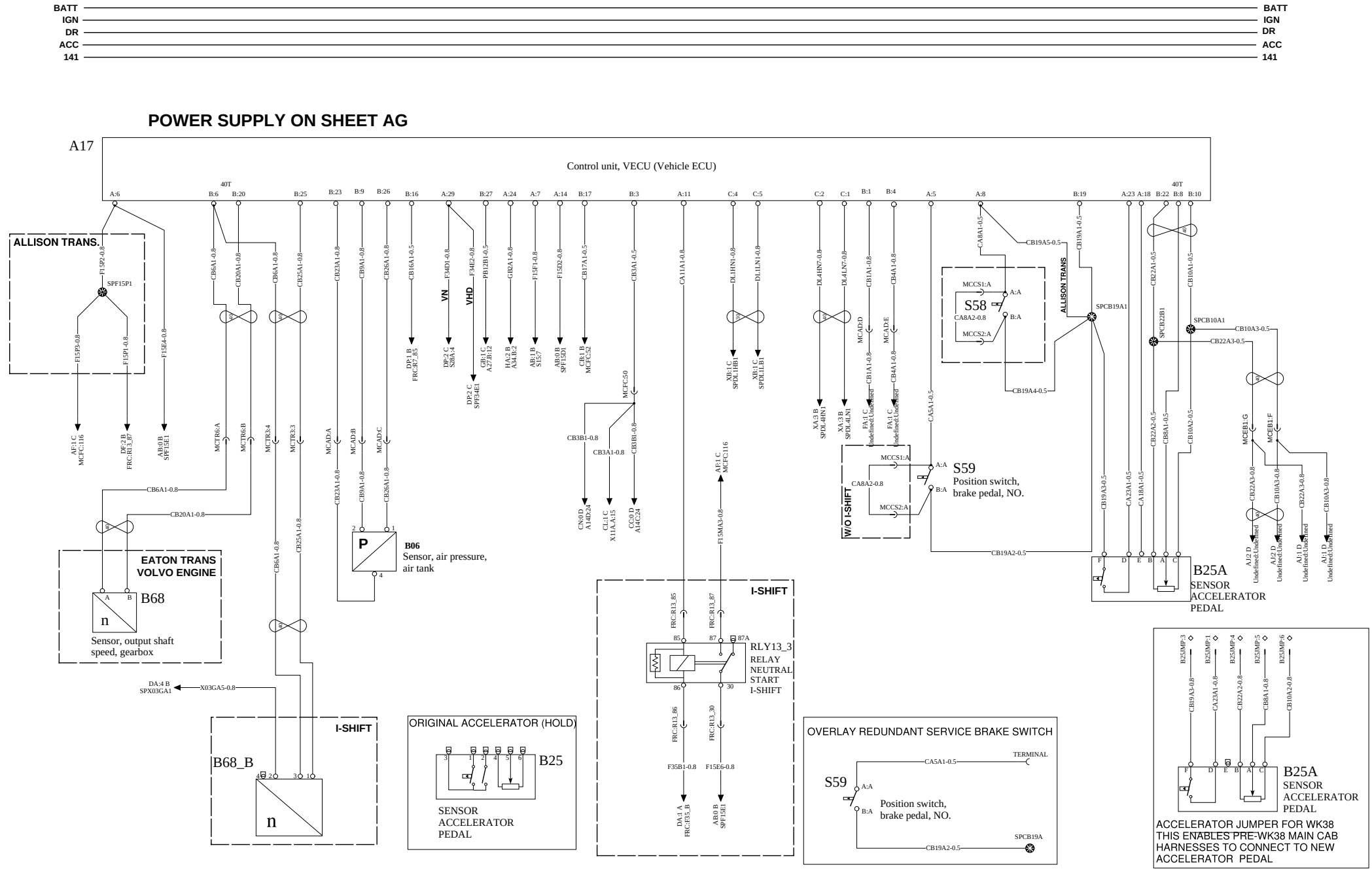

VOLVO Group Trucks Technology	Document title 12V SCHEMATIC VOLVO Document type PRODUCT SCHEMATIC	Document No 21849527	Issue 08	Volume 1 (2)	Page 11 (108)

VECHILE ECU 4/4 ENGINE BRAKE SWITCHES

WIRING DIAGRAM :AJ

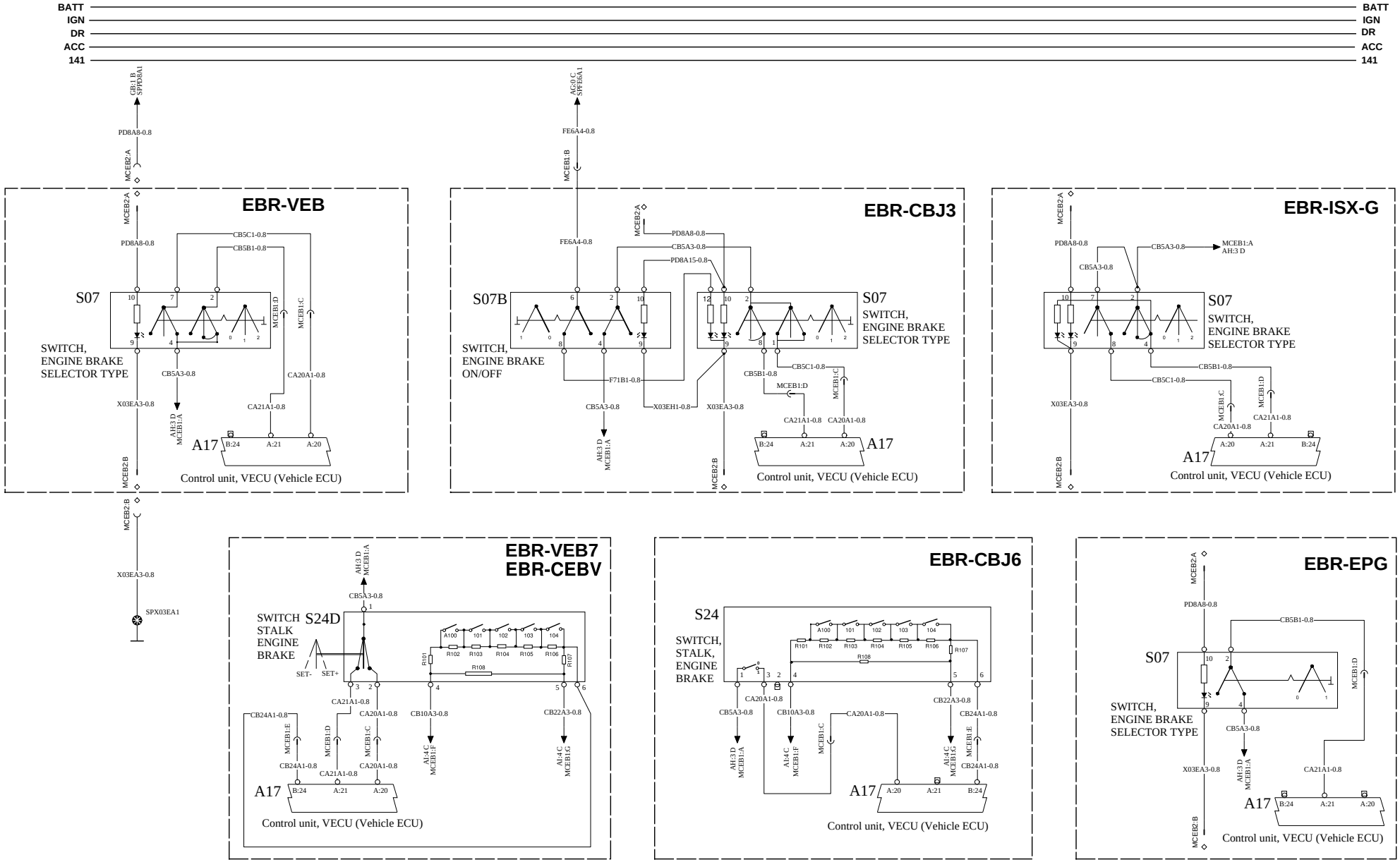

VOLVO Group Trucks Technology	Document title 12V SCHEMATIC VOLVO Document type PRODUCT SCHEMATIC	Document No 21849527	Issue 08	Volume 1 (2)	Page 12 (108)

GROUNDING OPTIONS

WIRING DIAGRAM :AL

BATT
IGN
DR
ACC
ILLUM

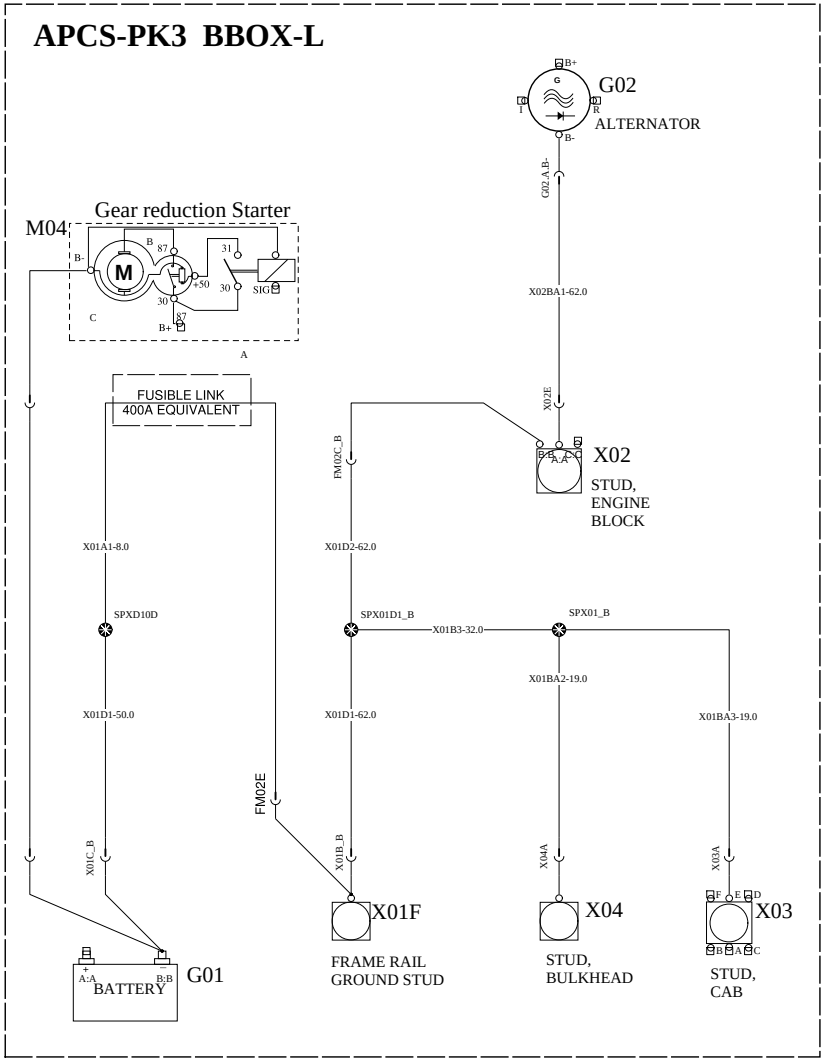

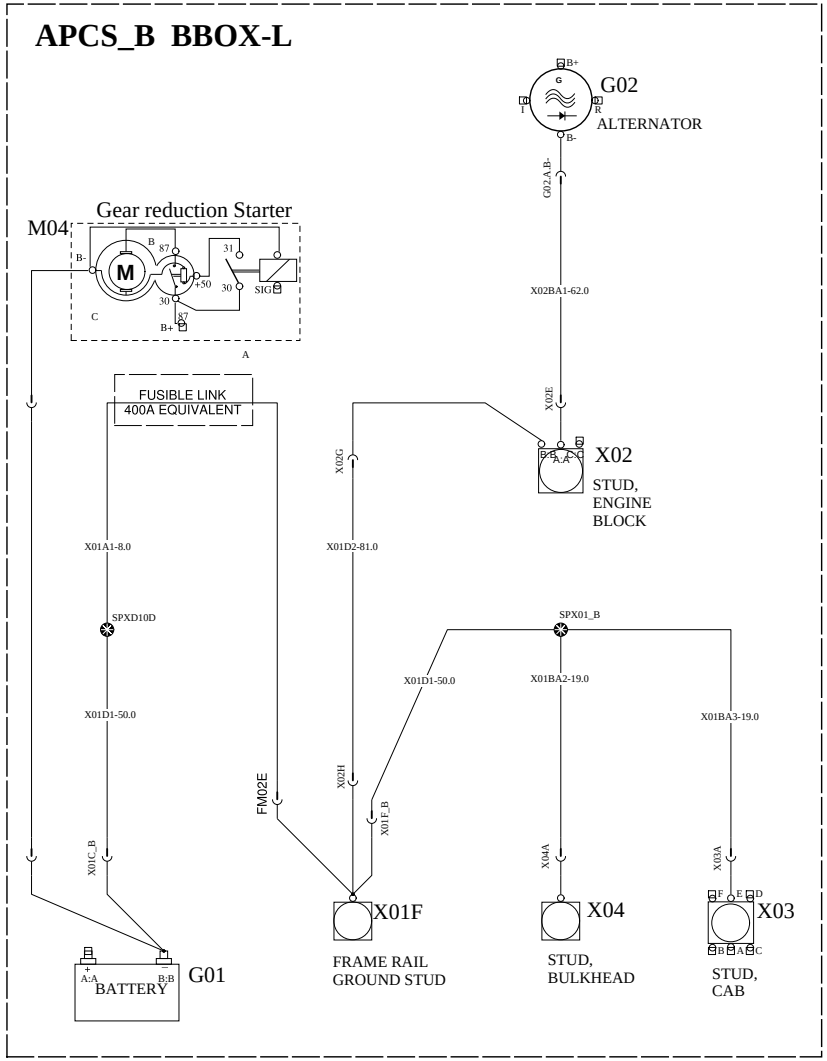

	Document title	Document No	Issue	Volume	Page
VOLVO Group Trucks Technology	12V SCHEMATIC VOLVO	21849527	08	1 (2)	13 (108)
	Document type: PRODUCT SCHEMATIC				

CHARGING AND POWER CABLES OPTIONS

WIRING DIAGRAM :AM

BATT
IGN
DR
ACC
ILLUM

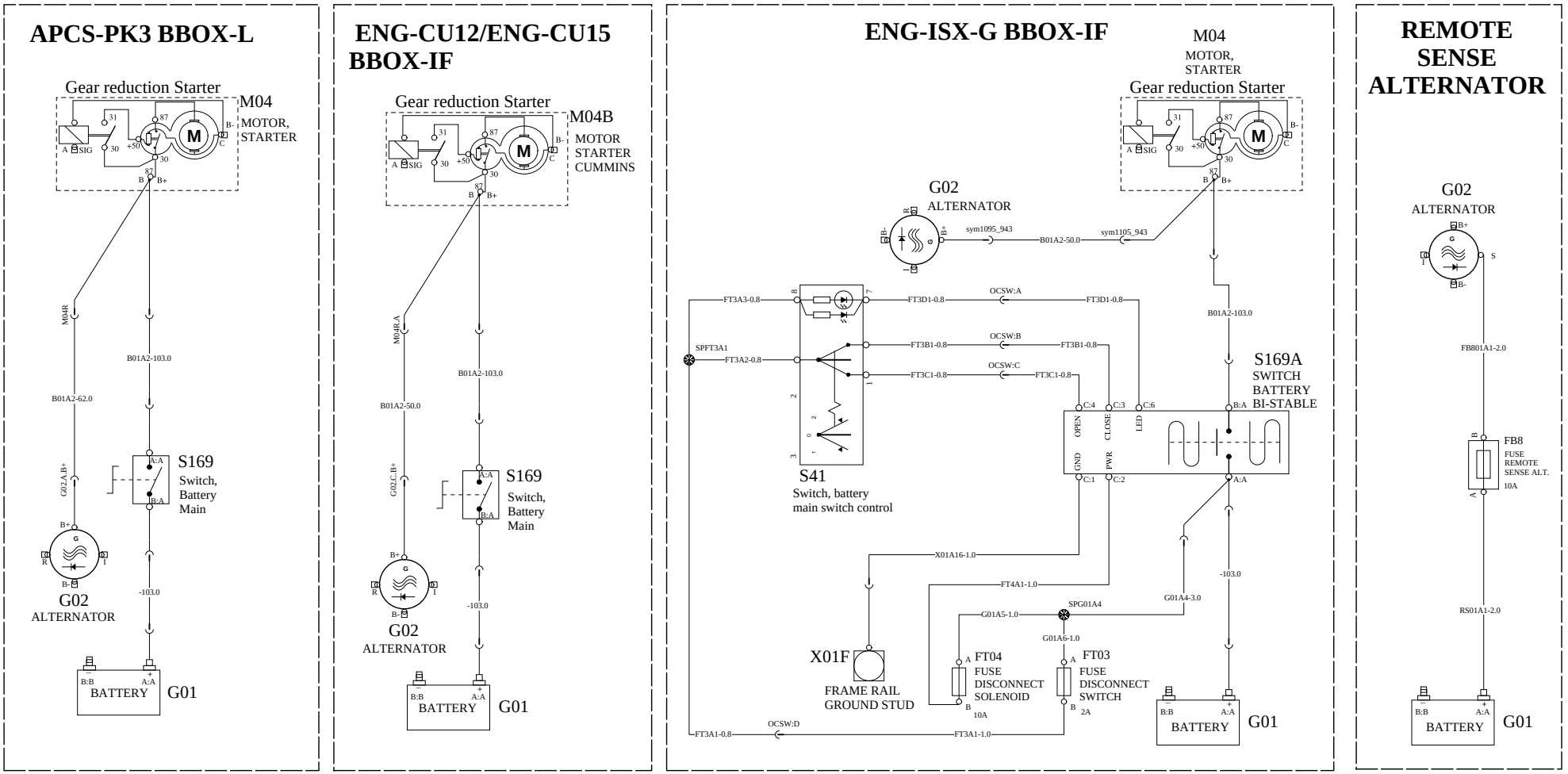

VOLVO Group Trucks Technology	Document title 12V SCHEMATIC VOLVO	Document No	Issue	Volume	Page
	Document type PRODUCT SCHEMATIC	21849527	08	1 (2)	14 (108)

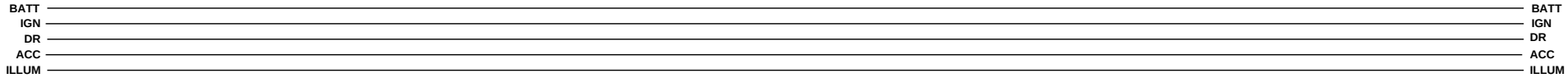

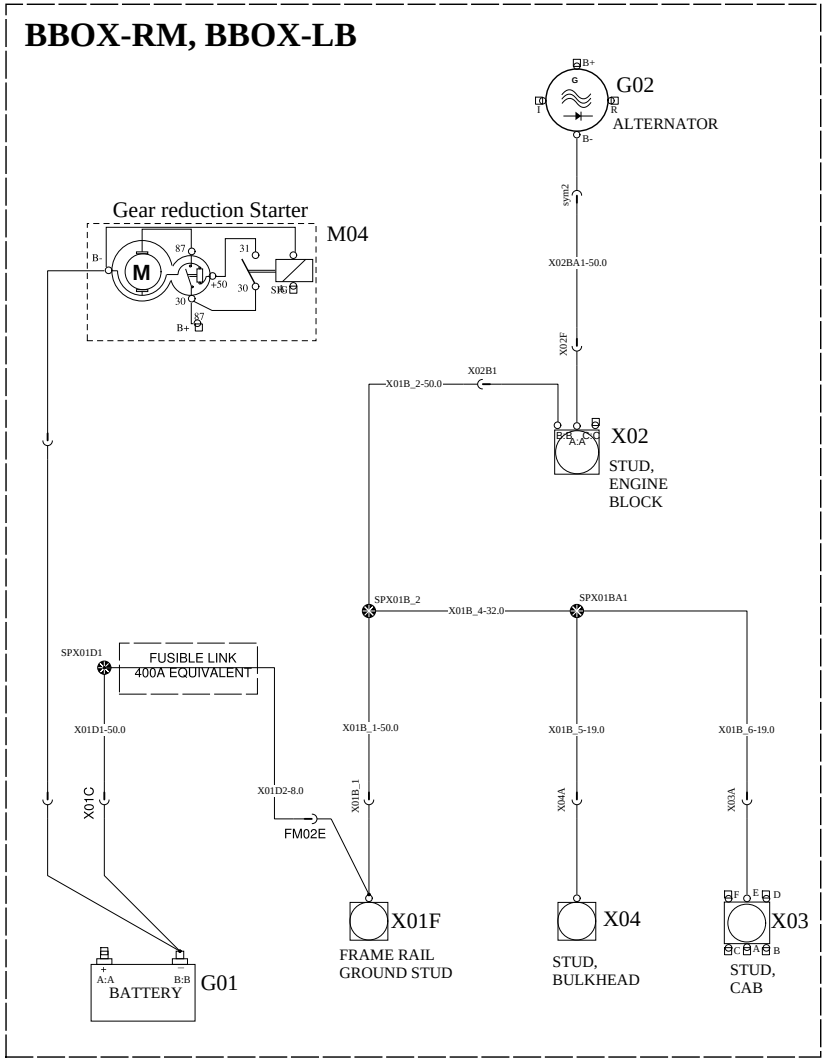

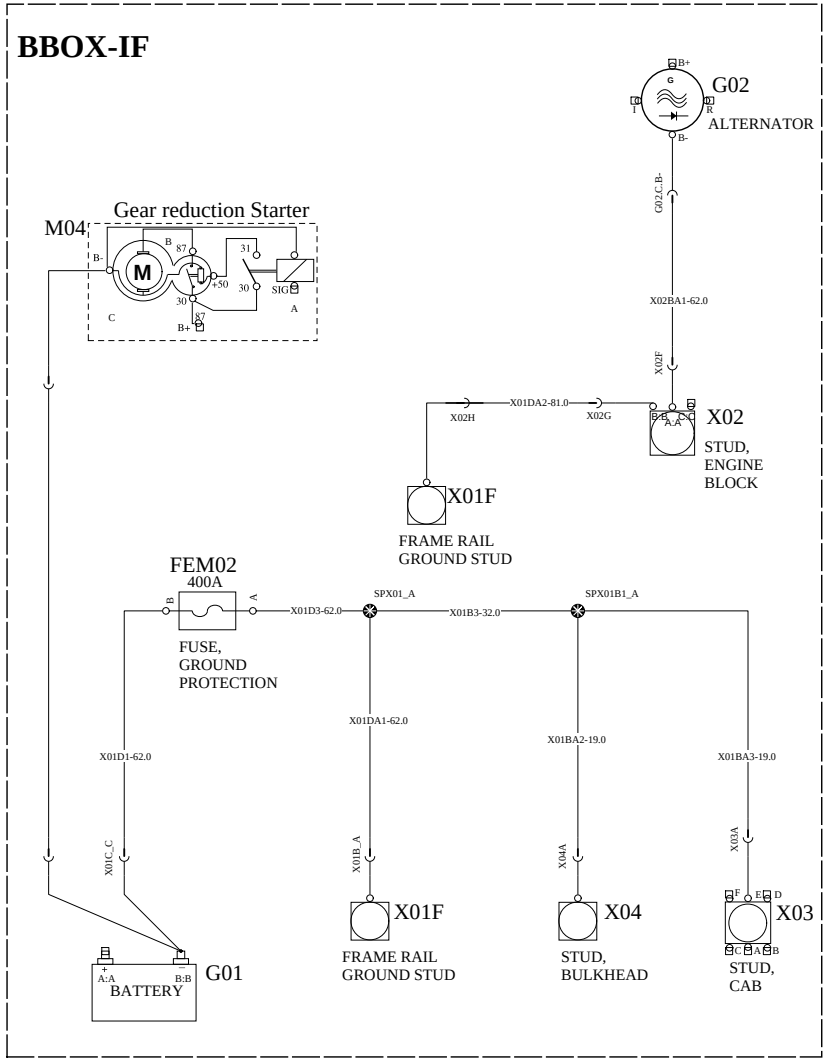

VOLVO Group Trucks Technology	Document title 12V SCHEMATIC VOLVO Document type PRODUCT SCHEMATIC	Document No 21849527	Issue 08	Volume 1 (2)	Page 15 (108)

INSTRUMENTATION CLUSTER A/B

WIRING DIAGRAM :BA

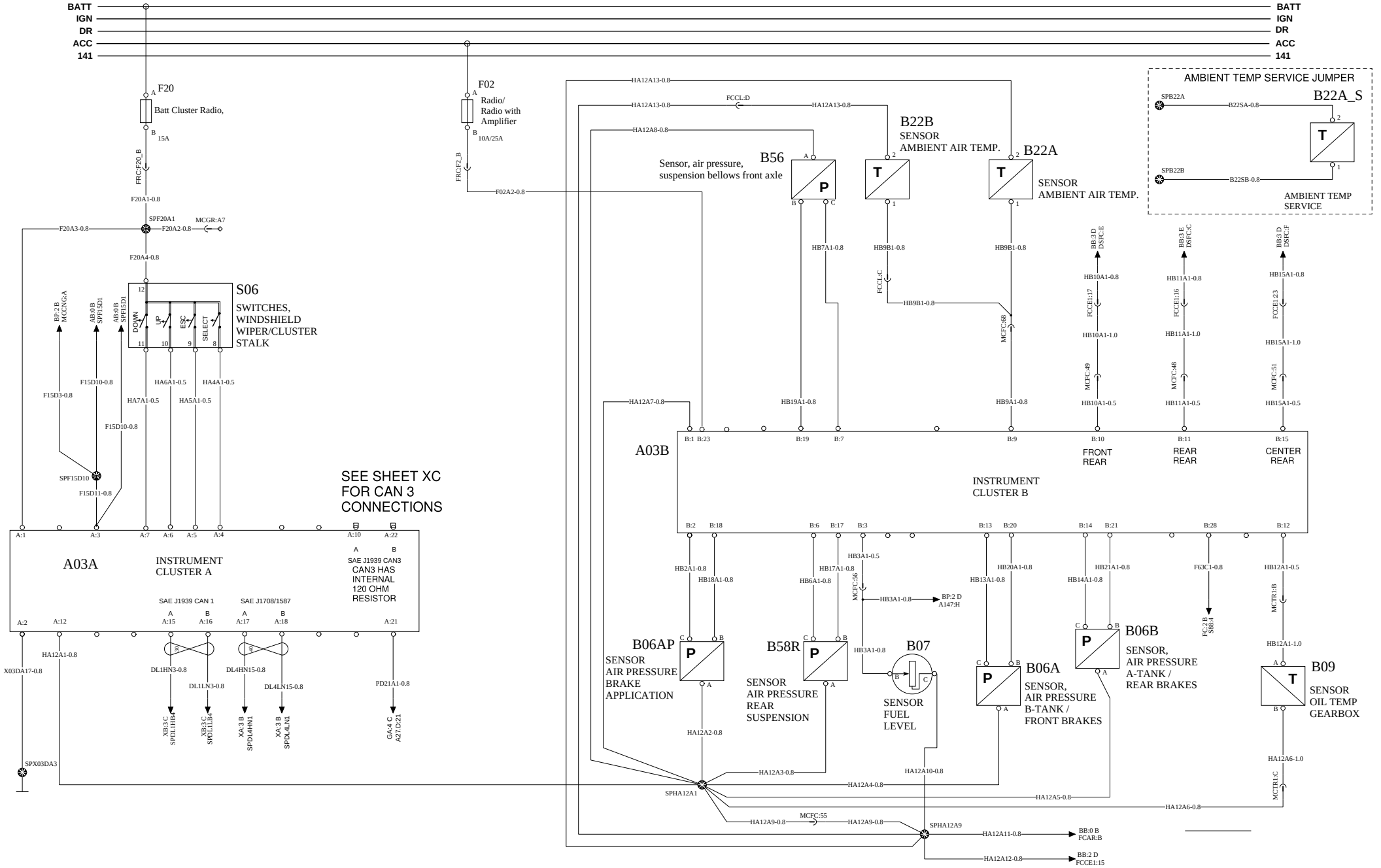

VOLVO Group Trucks Technology	Document title 12V SCHEMATIC VOLVO	Document No	Issue	Volume	Page
	Document type PRODUCT SCHEMATIC	21849527	08	1 (2)	16 (108)

INSTRUMENTATION CLUSTER C

WIRING DIAGRAM :BB

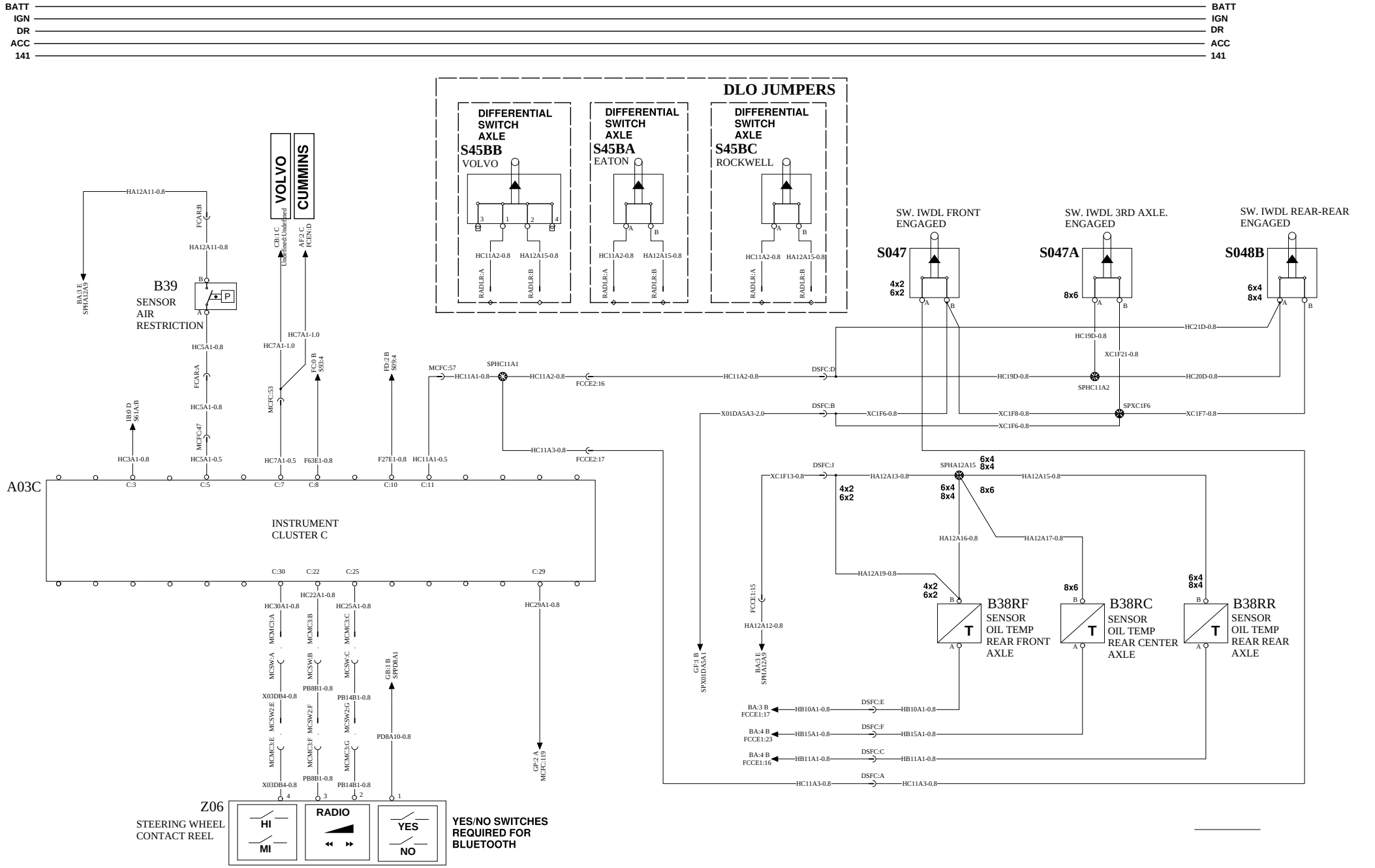

VOLVO Group Trucks Technology	Document title 12V SCHEMATIC VOLVO	Document No	Issue	Volume	Page
	Document type PRODUCT SCHEMATIC	21849527	08	1 (2)	17 (108)

INSTRUMENTATION ROAD RELAY

WIRING DIAGRAM :BC

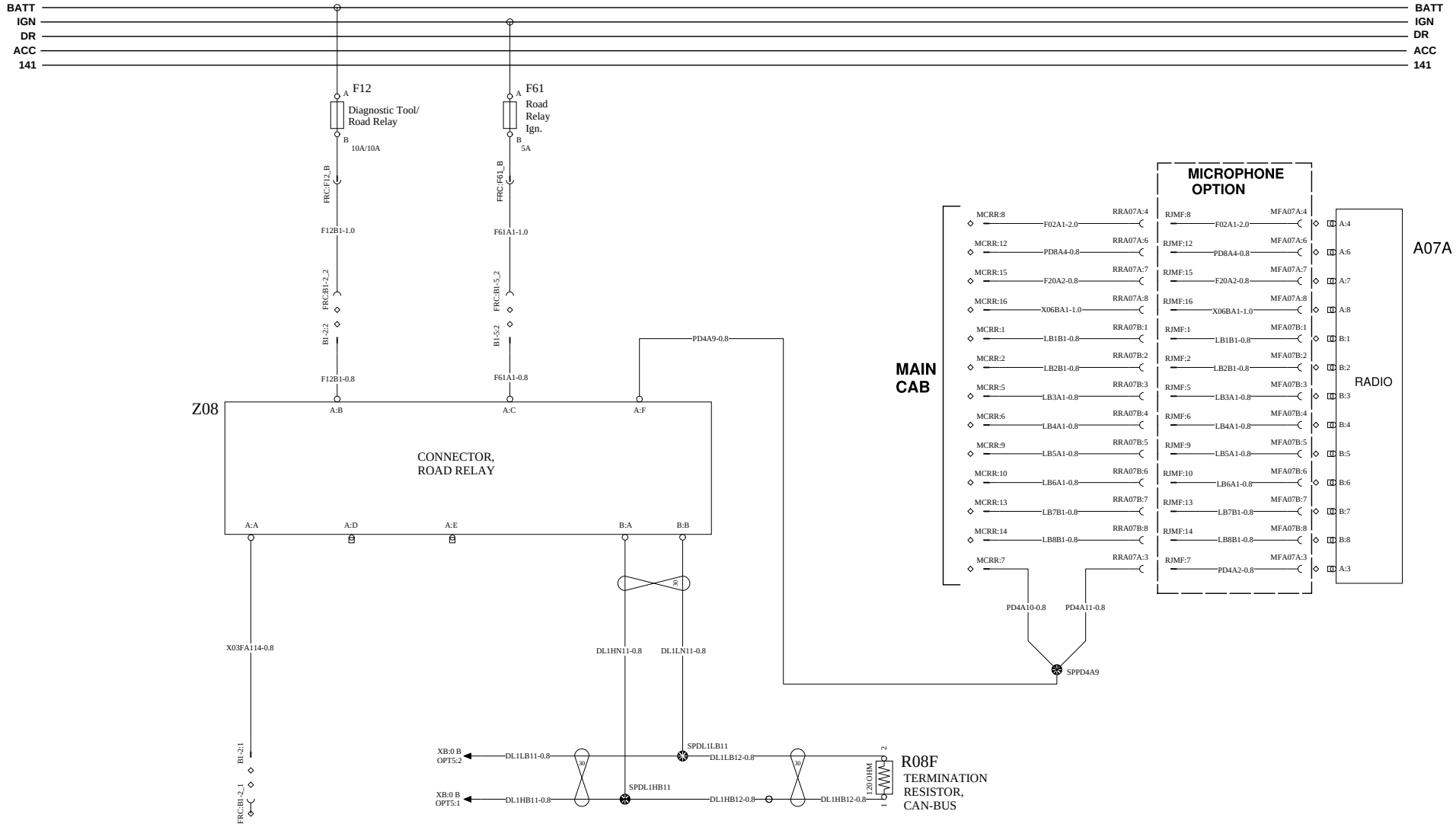

VOLVO Group Trucks Technology	Document title 12V SCHEMATIC VOLVO	Document No	Issue	Volume	Page
	Document type PRODUCT SCHEMATIC	21849527	08	1 (2)	18 (108)

INSTRUMENTATION OPTIONAL GAUGES

WIRING DIAGRAM :BD

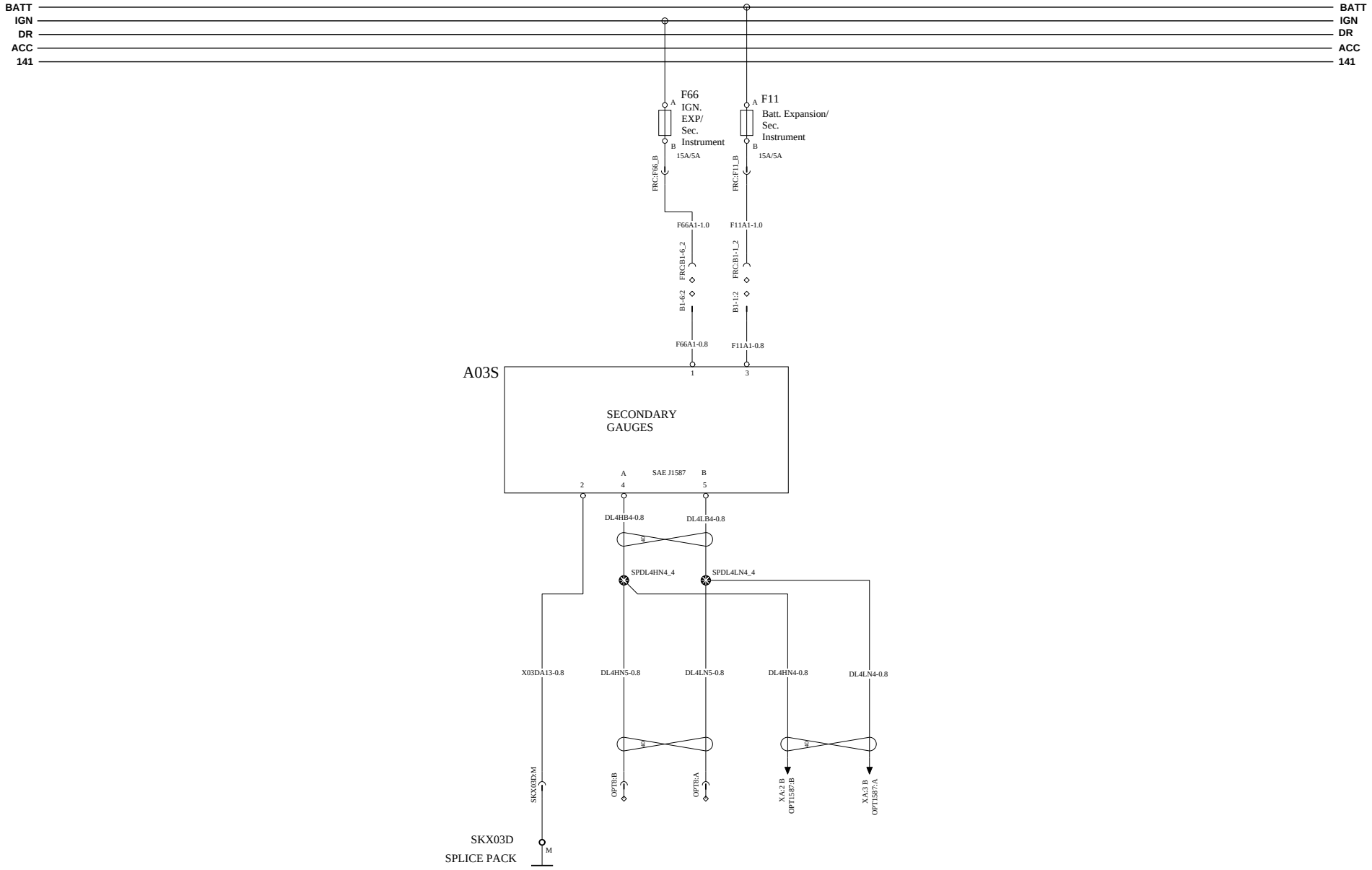

VOLVO Group Trucks Technology	Document title 12V SCHEMATIC VOLVO	Document No	Issue	Volume	Page
	Document type PRODUCT SCHEMATIC	21849527	08	1 (2)	19 (108)

COMMUNICATIONS QUALCOMM/OMNIVISION WIRING DIAGRAM :BE

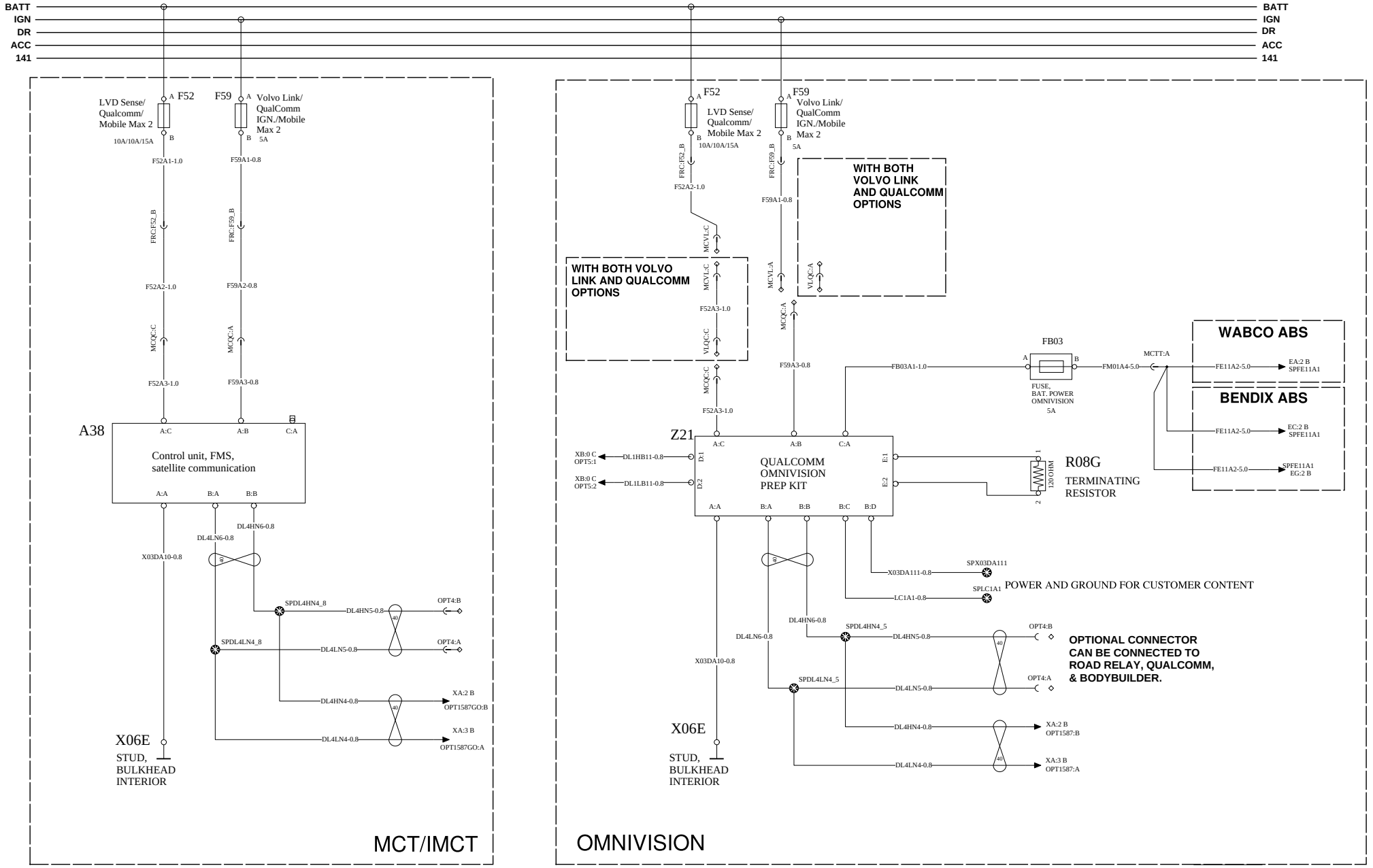

VOLVO Group Trucks Technology	Document title 12V SCHEMATIC VOLVO	Document No	Issue	Volume	Page
	Document type PRODUCT SCHEMATIC	21849527	08	1 (2)	20 (108)

COMMUNICATIONS MOBILE MAX II

WIRING DIAGRAM :BG

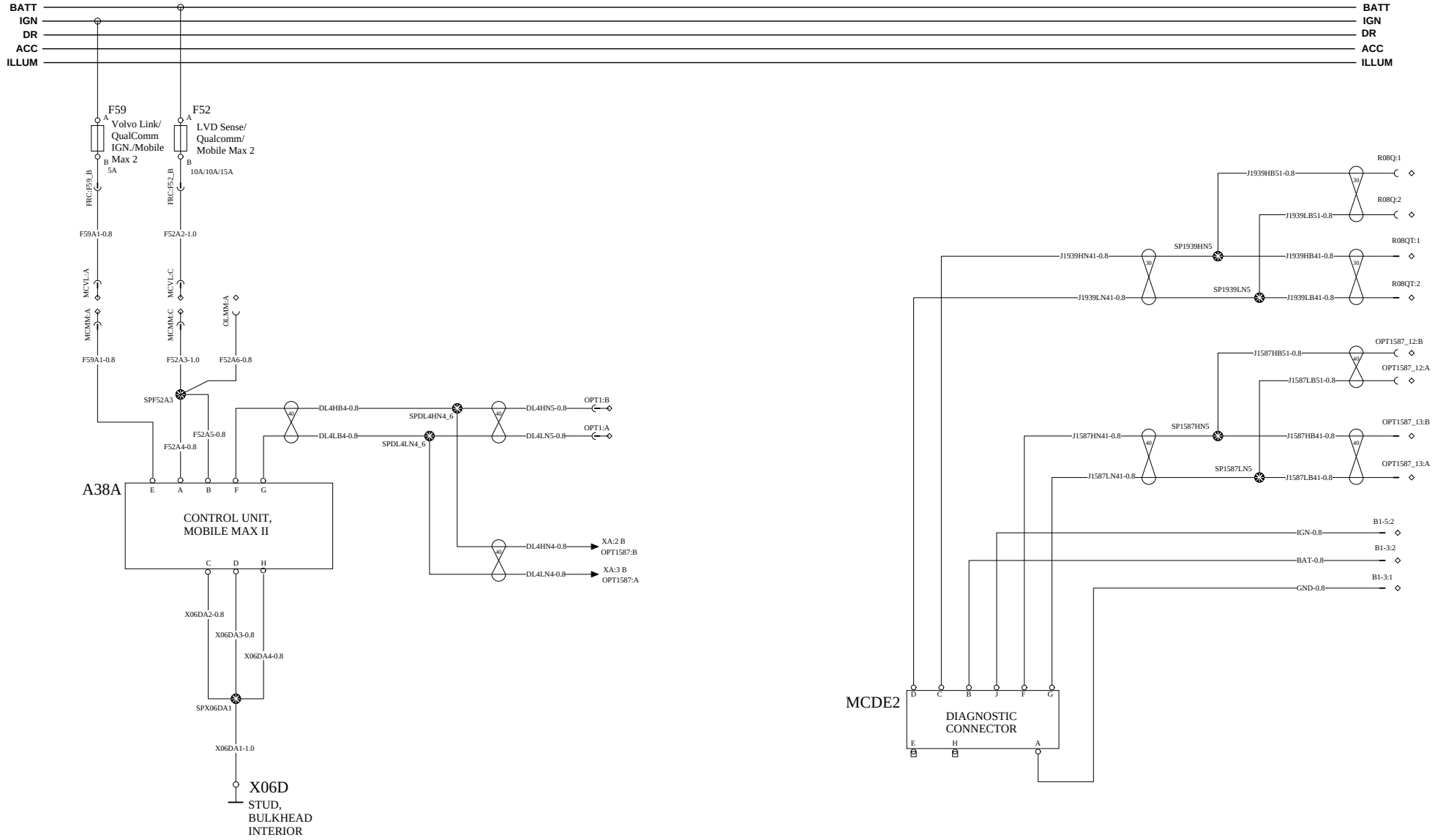

VOLVO Group Trucks Technology	Document title 12V SCHEMATIC VOLVO	Document No	Issue	Volume	Page
	Document type PRODUCT SCHEMATIC	21849527	08	1 (2)	21 (108)

BODYBUILDER

WIRING DIAGRAM :BH

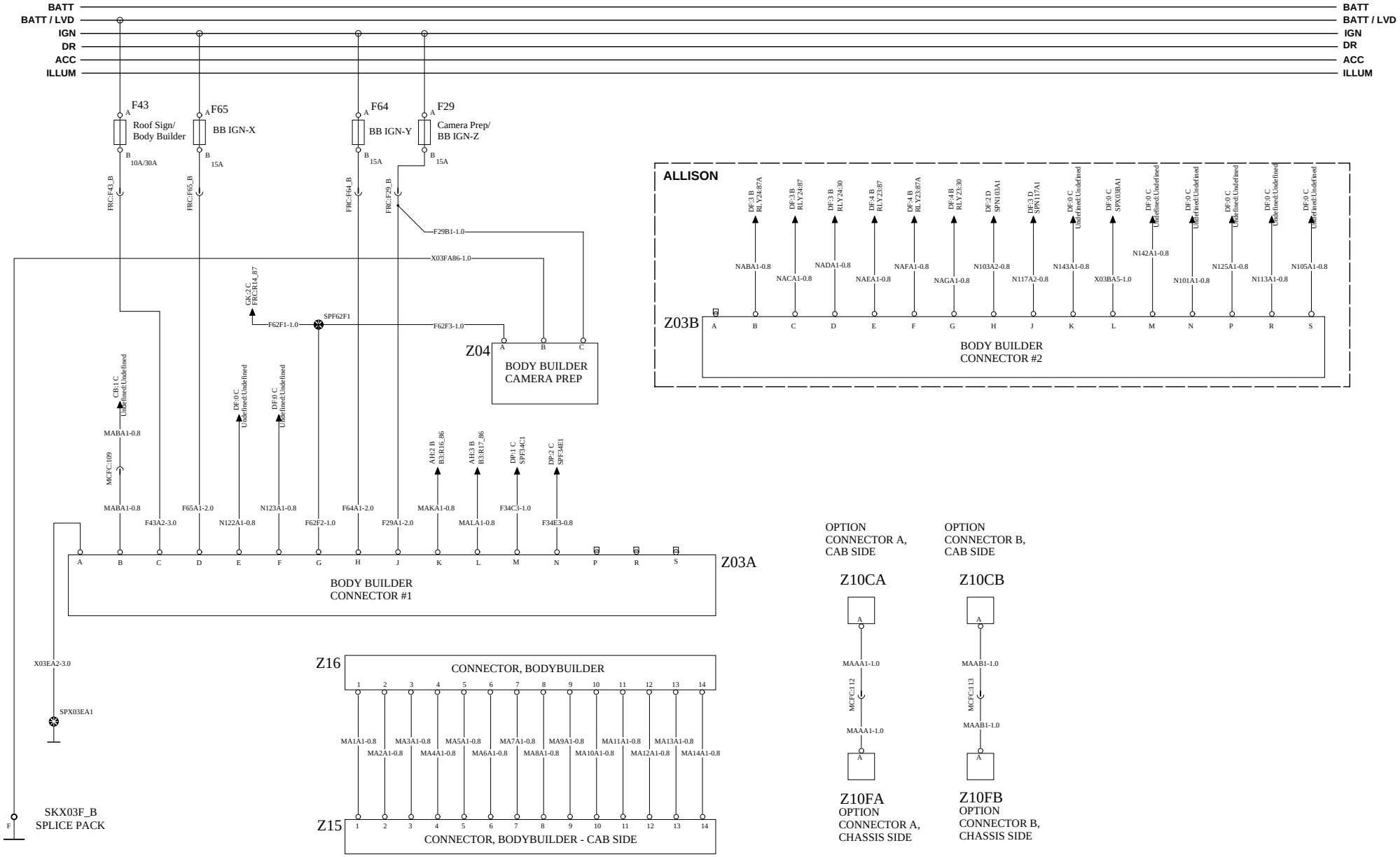

VOLVO Group Trucks Technology	Document title 12V SCHEMATIC VOLVO	Document No	Issue	Volume	Page
	Document type PRODUCT SCHEMATIC	21849527	08	1 (2)	22 (108)

BODYBUILDER MODULE 2013

WIRING DIAGRAM :BI

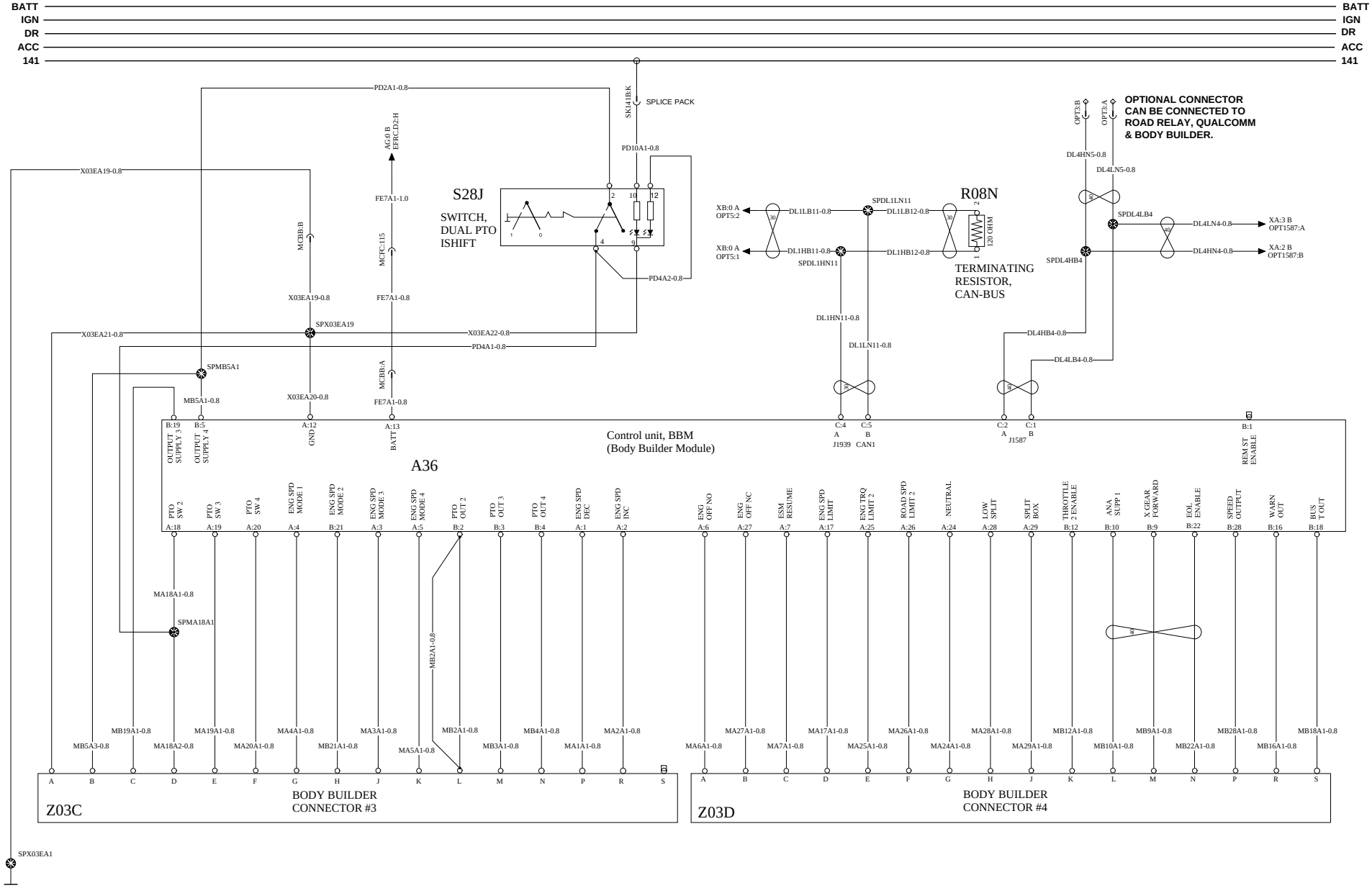

VOLVO Group Trucks Technology	Document title 12V SCHEMATIC VOLVO	Document No	Issue	Volume	Page
	Document type PRODUCT SCHEMATIC	21849527	08	1 (2)	23 (108)

TELEMATICS GATEWAY (TGW)

WIRING DIAGRAM :BJ

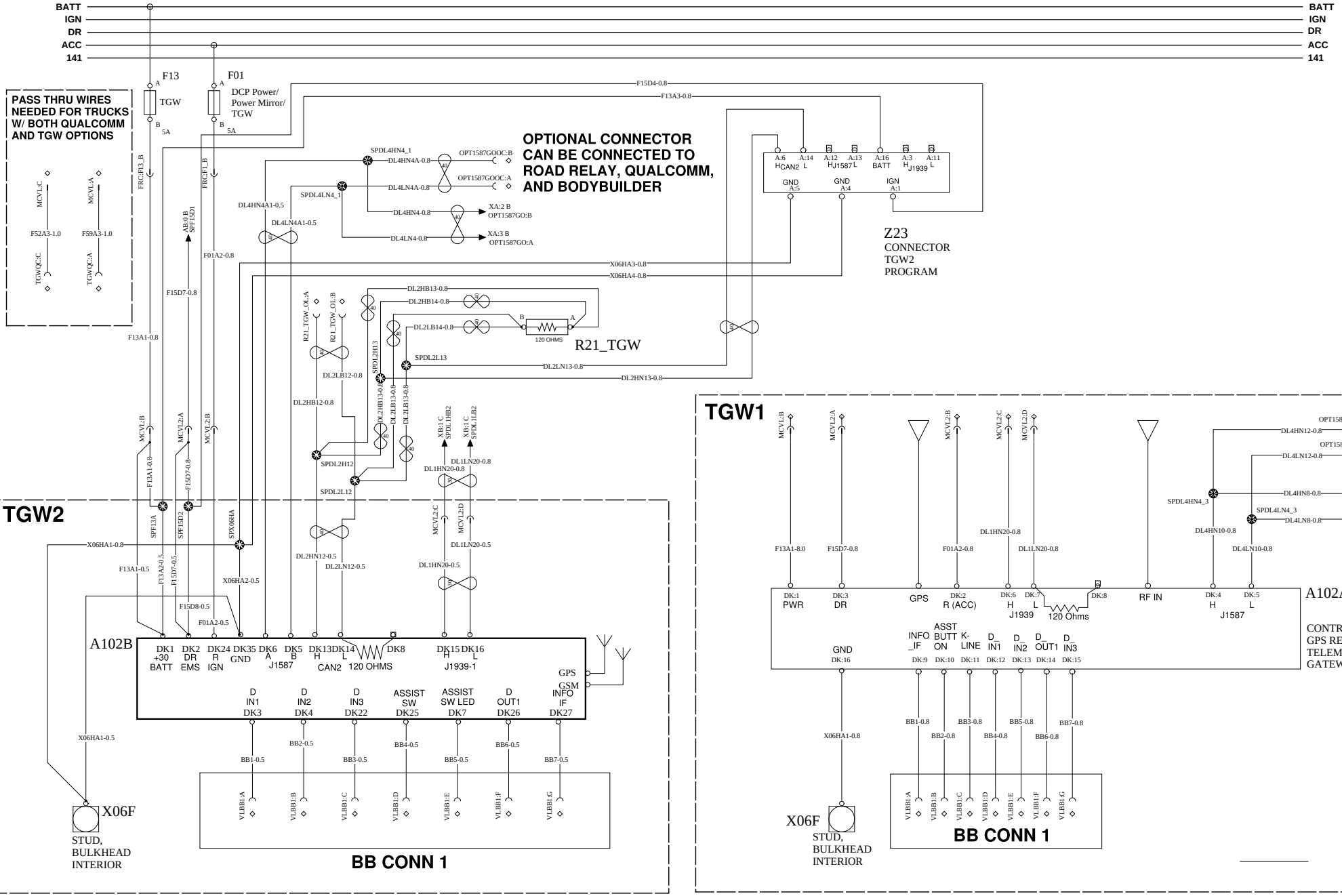

VOLVO Group Trucks Technology	Document title 12V SCHEMATIC VOLVO Document type PRODUCT SCHEMATIC	Document No 21849527	Issue 08	Volume 1 (2)	Page 24 (108)

BATTERY BUSSING

WIRING DIAGRAM :BL

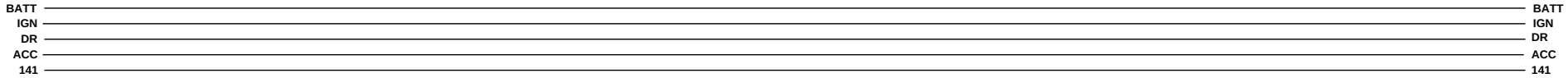

BATTB-N W/ 2 BATTERIES BUSS BARS

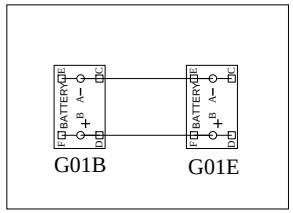

BATTB-S W/2 BATTERIES CABLES FOR JUMPERS

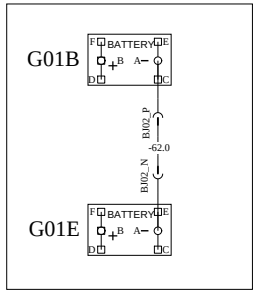

BATTB-SS W/ 3 BATTERIES CABLES FOR JUMPERS

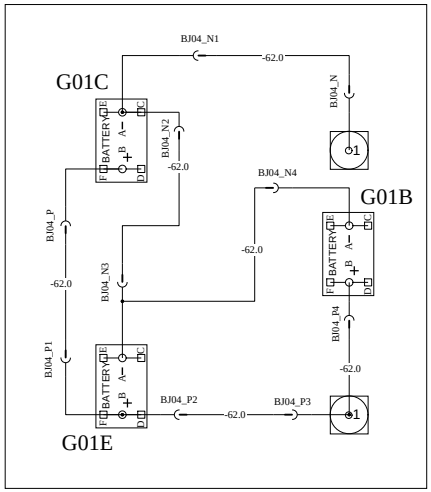

BATTB-N W/ 3 BATTERIES BUSS BARS

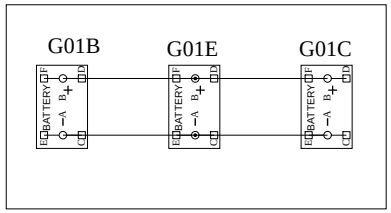

BATTB-S W/ 3 BATTERIES CABLES FOR JUMPERS

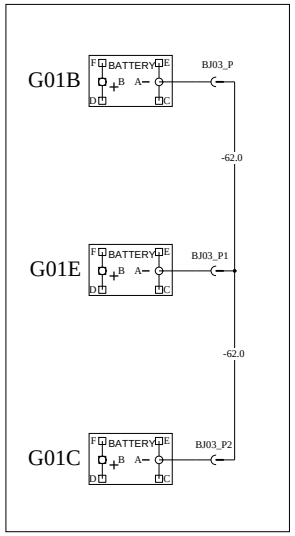

BATTB-N W/ 4 BATTERIES BUSS BARS
BATTB-N W/ 4 BATTERIES FOR JUMPERS

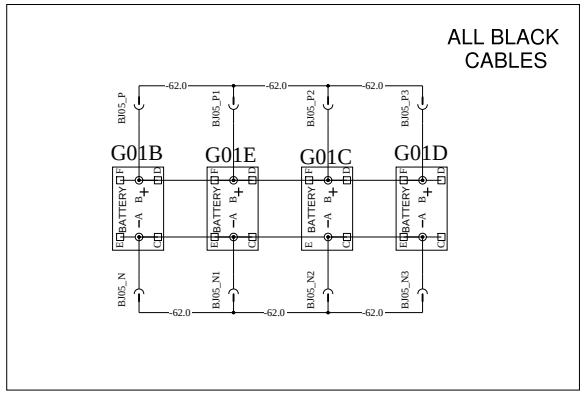

BBOX_IF CABLES FOR JUMPERS

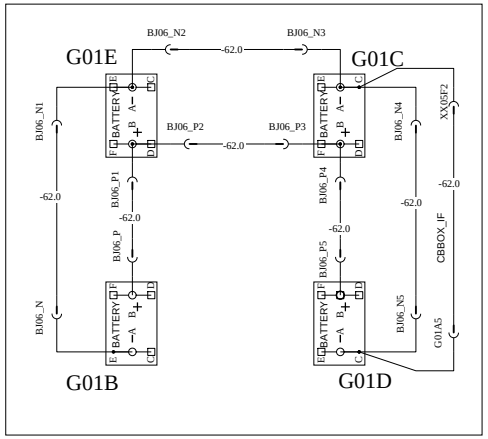

VOLVO Group Trucks Technology	Document title 12V SCHEMATIC VOLVO Document type PRODUCT SCHEMATIC	Document No 21849527	Issue 08	Volume 1 (2)	Page 25 (108)

BODYBUILDER MODULE 2016

WIRING DIAGRAM: BM

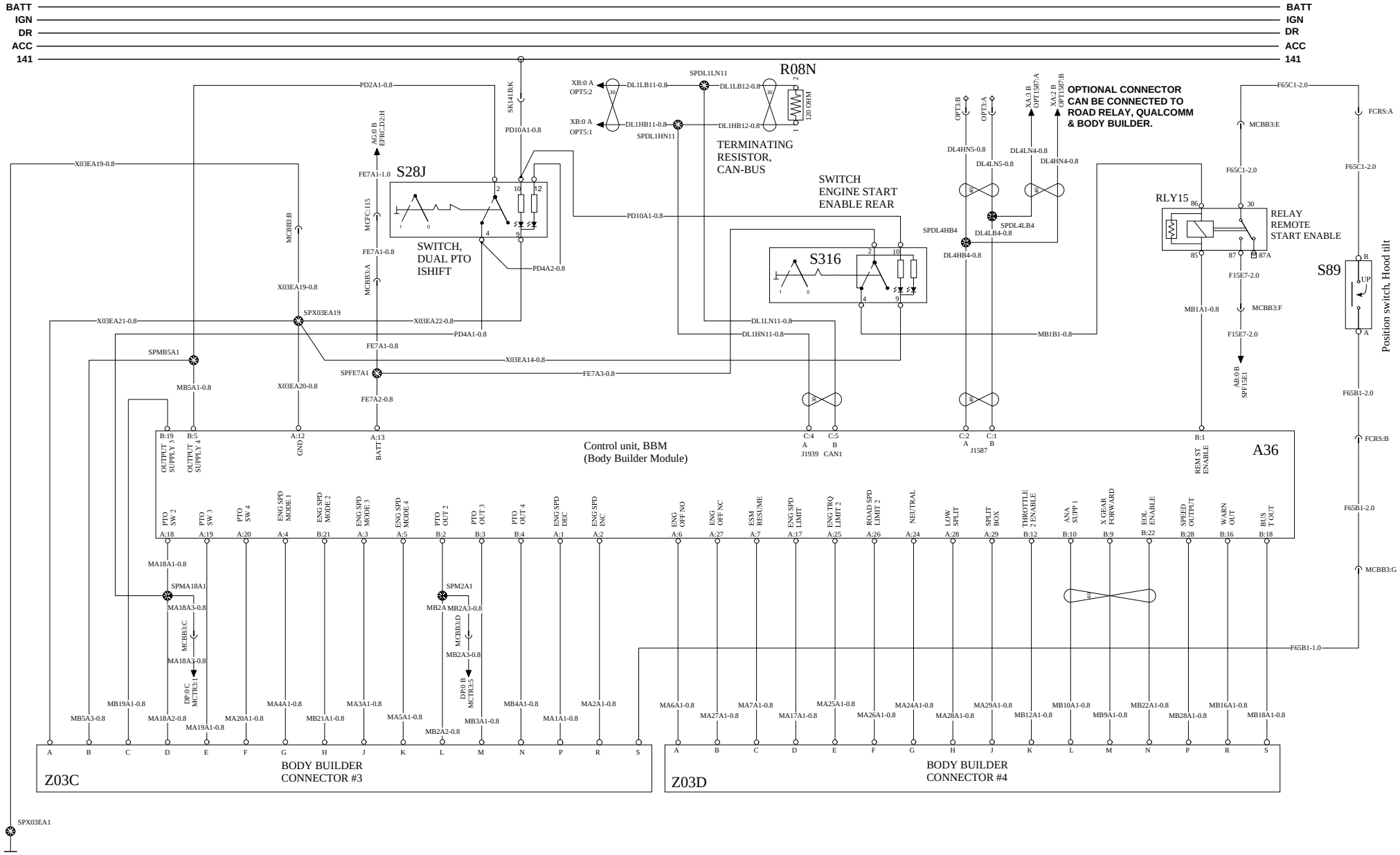

VOLVO Group Trucks Technology	Document title 12V SCHEMATIC VOLVO	Document No	Issue	Volume	Page
	Document type PRODUCT SCHEMATIC	21849527	08	1 (2)	26 (108)

ISX-G FUEL SYSTEM

WIRING DIAGRAM - BP

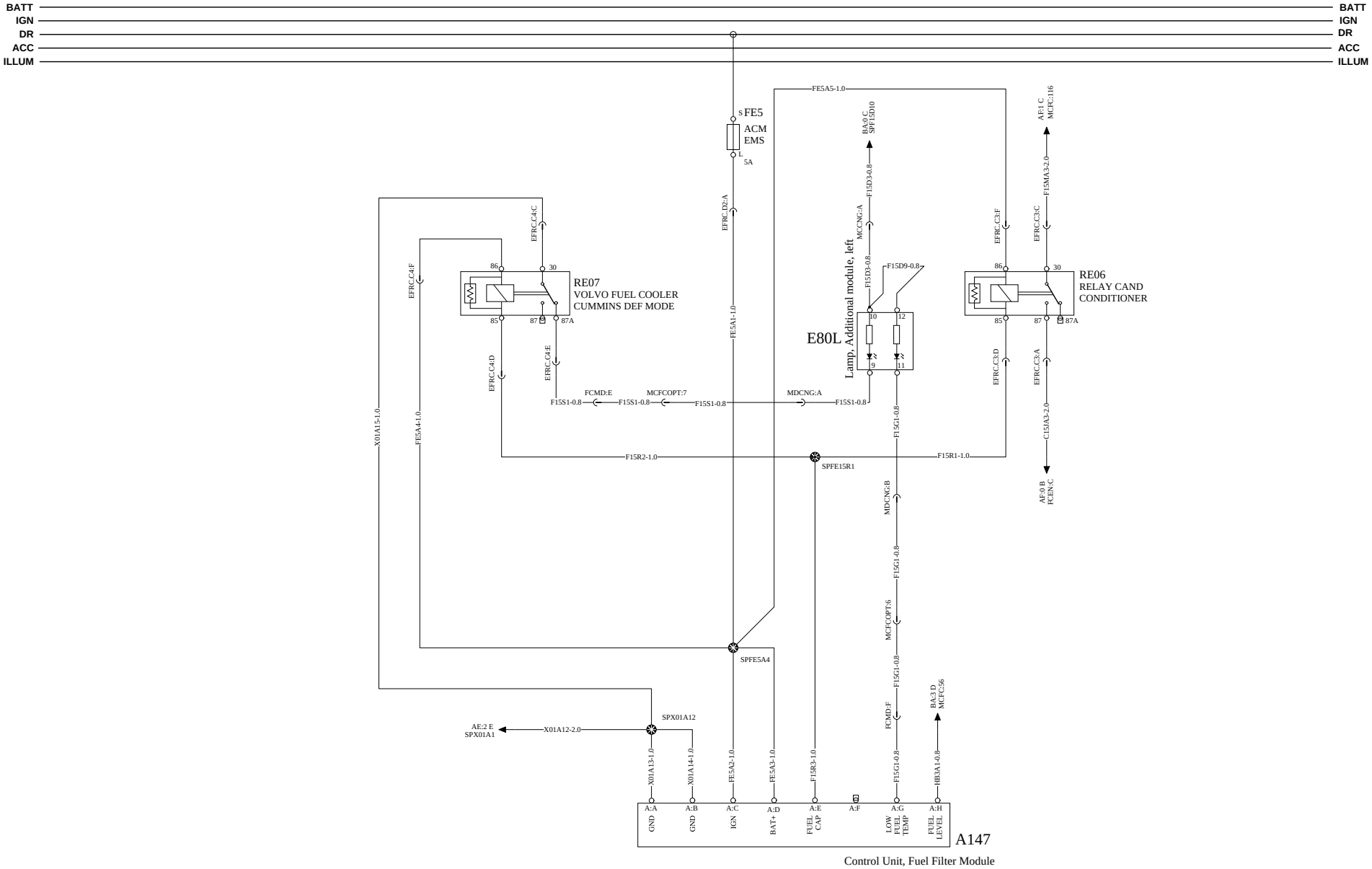

	Document title	Document No	Issue	Volume	Page
VOLVO Group Trucks Technology	12V SCHEMATIC VOLVO	21849527	08	1 (2)	27 (108)
	Document type: PRODUCT SCHEMATIC				

EITHER START/ENGINE HEATER WIRING DIAGRAM :CA

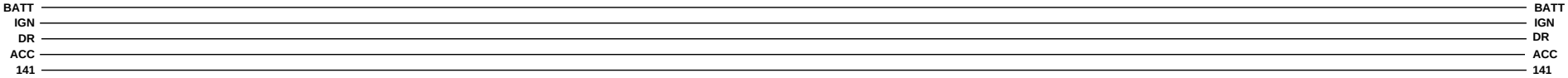

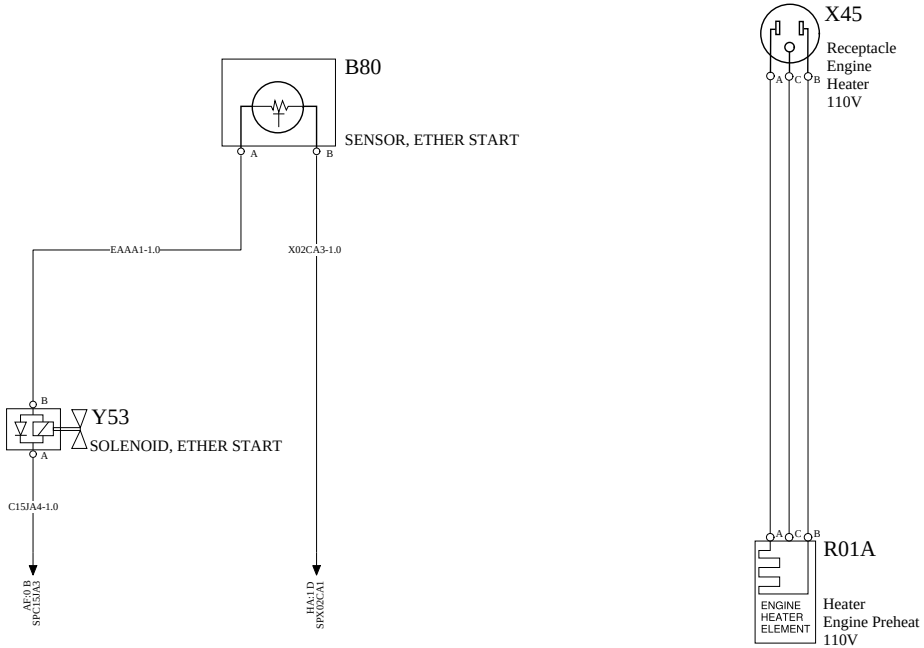

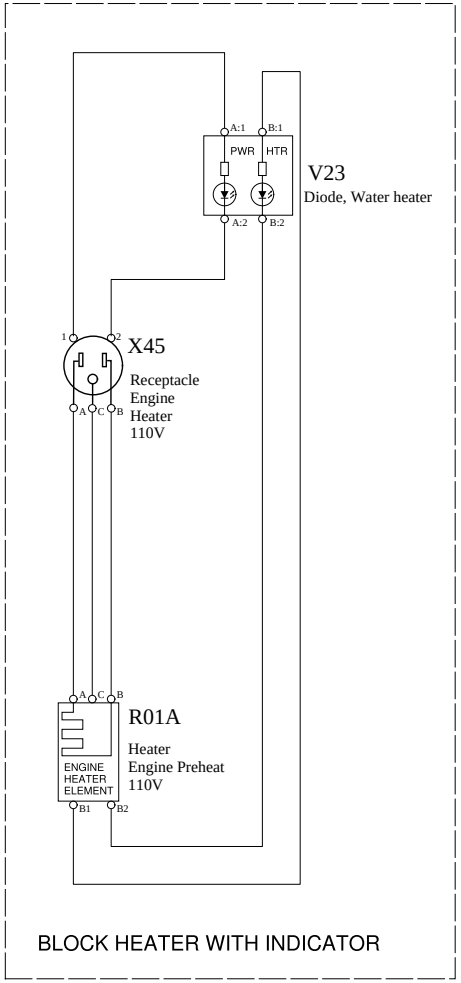

VOLVO Group Trucks Technology	Document title 12V SCHEMATIC VOLVO Document type PRODUCT SCHEMATIC	Document No 21849527	Issue 08	Volume 1 (2)	Page 28 (108)

ENGINE CONTROL VOLVO ENGINE

WIRING DIAGRAM:CB

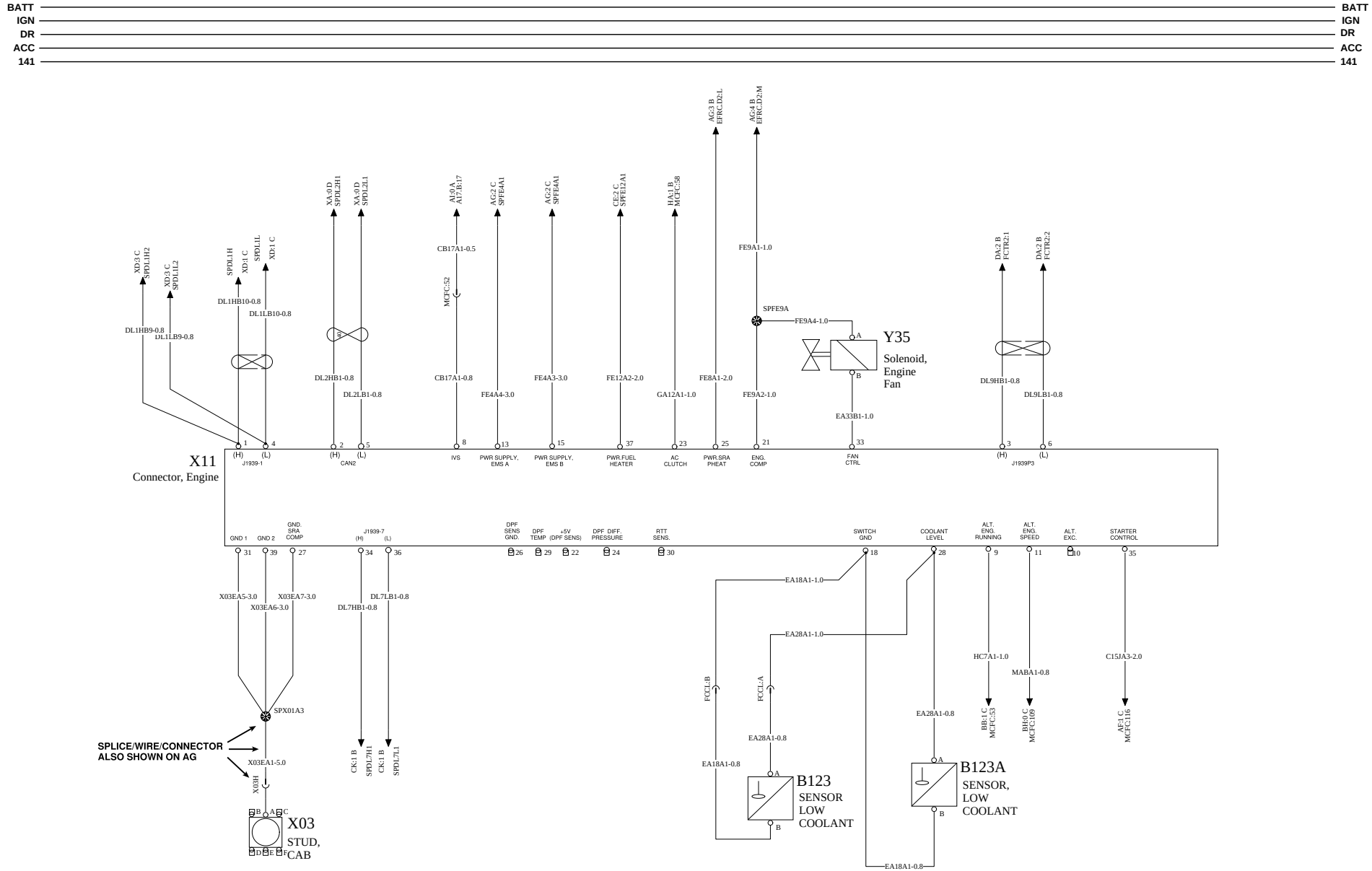

VOLVO Group Trucks Technology	Document title 12V SCHEMATIC VOLVO	Document No	Issue	Volume	Page
	Document type PRODUCT SCHEMATIC	21849527	08	1 (2)	29 (108)

ENGINE CONTROL ISX US13 1/2

WIRING DIAGRAM: CC

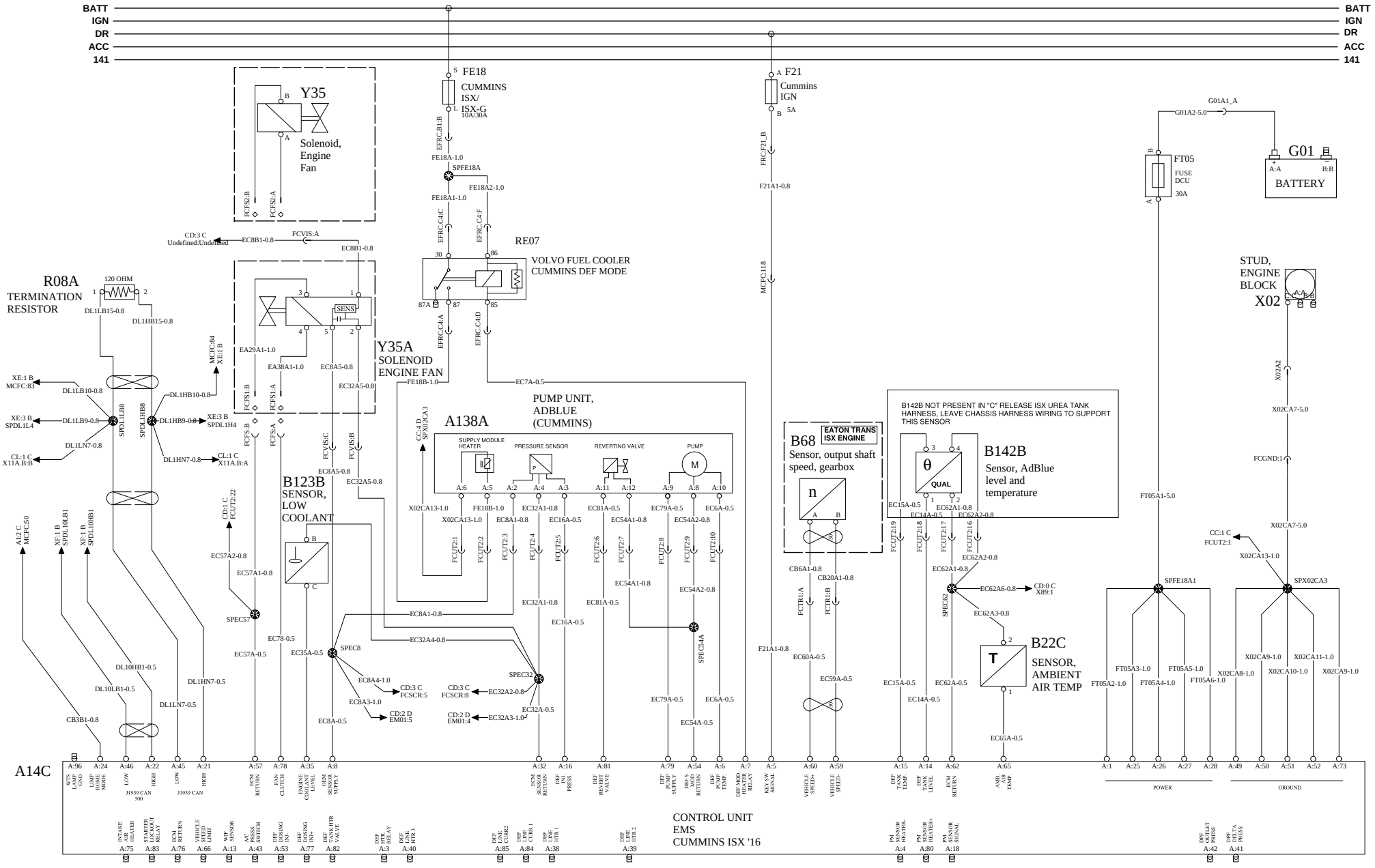

Document title	Document No	Issue	Volume	Page
12V SCHEMATIC VOLVO	21849527	08	1 (2)	30 (108)
Document type: PRODUCT SCHEMATIC				

VOLVO Group Trucks Technology

ENGINE CONTROL ISX US13 2/2

WIRING DIAGRAM: CD

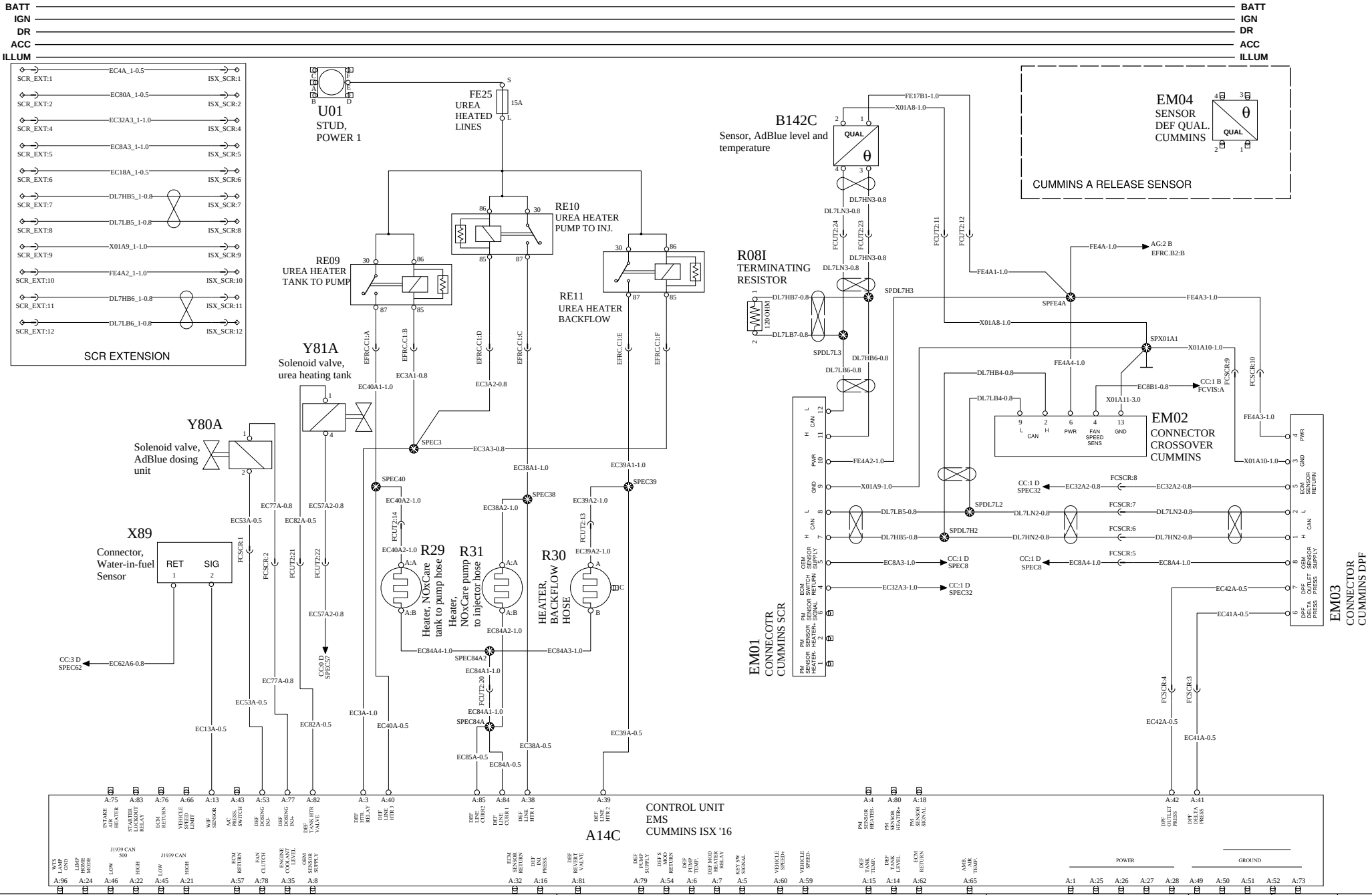

Document title	Document No	Issue	Volume	Page
12V SCHEMATIC VOLVO	21849527	08	1 (2)	31 (108)
Document type: PRODUCT SCHEMATIC				

VOLVO Group Trucks Technology

FUEL FILTER HEATER

WIRING DIAGRAM: CE

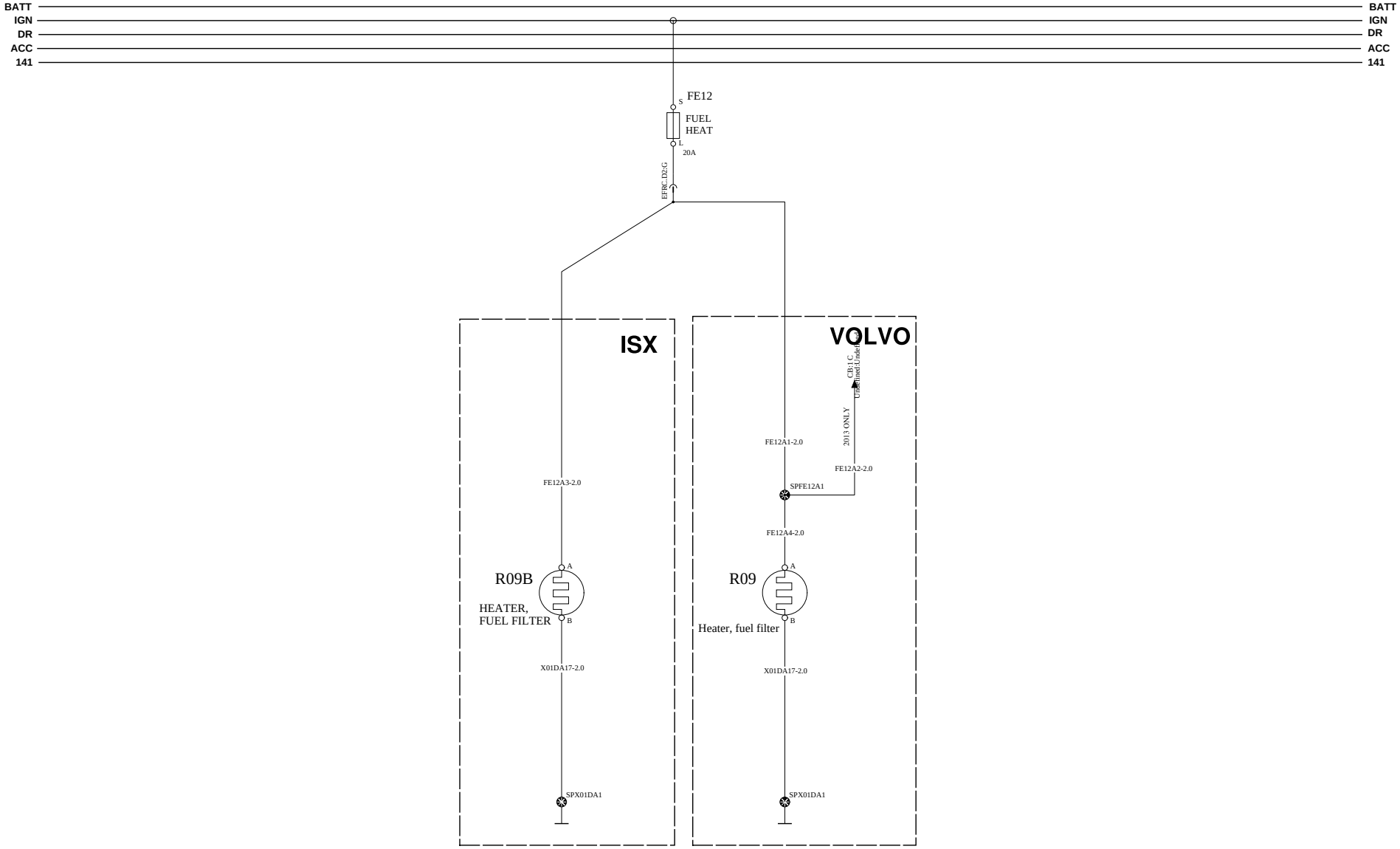

VOLVO Group Trucks Technology	Document title 12V SCHEMATIC VOLVO	Document No	Issue	Volume	Page
	Document type PRODUCT SCHEMATIC	21849527	08	1 (2)	32 (108)

INSIDE/OUTSIDE AIR CLEANER

WIRING DIAGRAM: CH

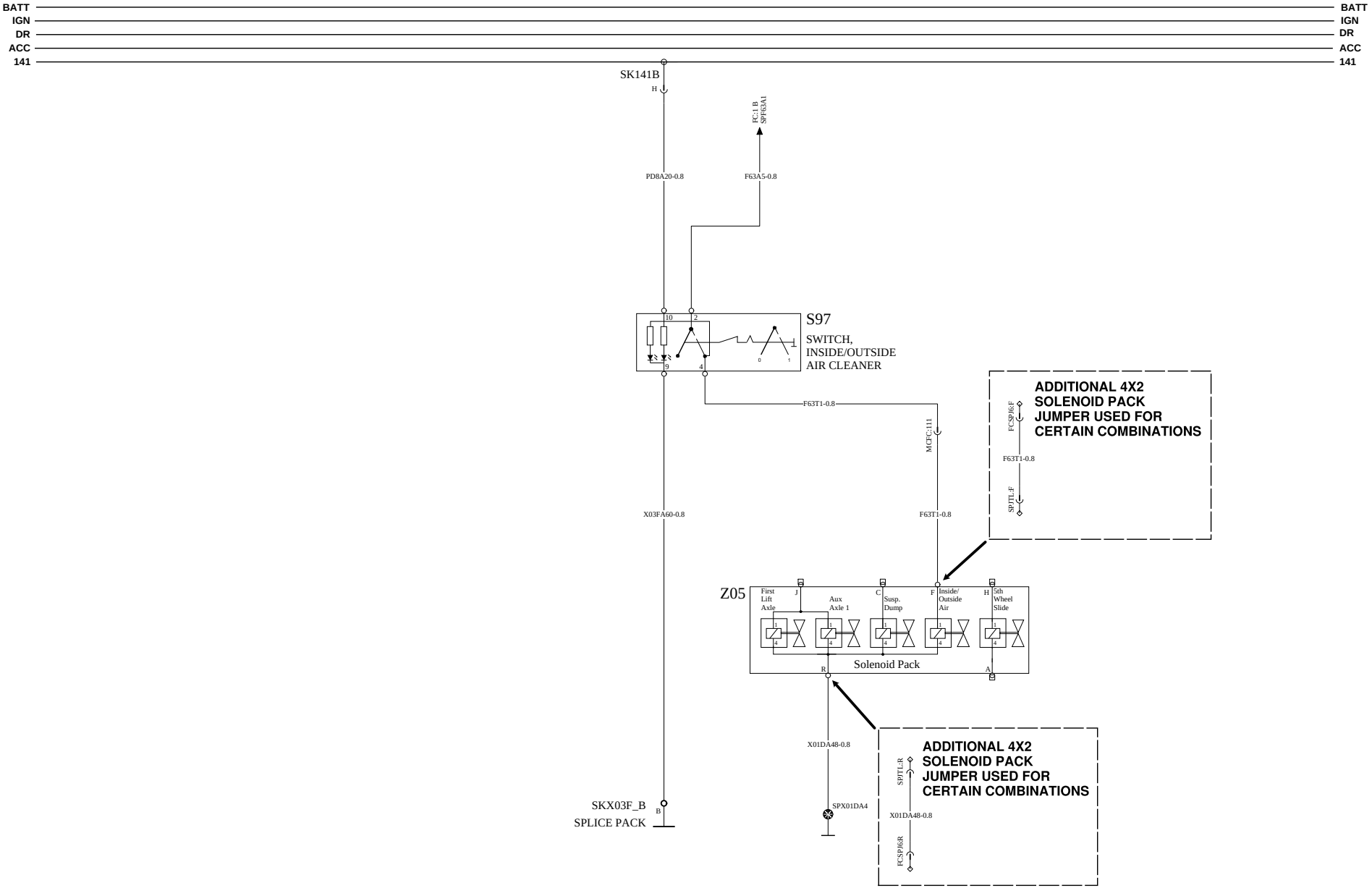

VOLVO Group Trucks Technology	Document title 12V SCHEMATIC VOLVO	Document No	Issue	Volume	Page
	Document type PRODUCT SCHEMATIC	21849527	08	1 (2)	33 (108)

UREA DOSING SYSTEM 3/3 OBD 2013

WIRING DIAGRAM:CK

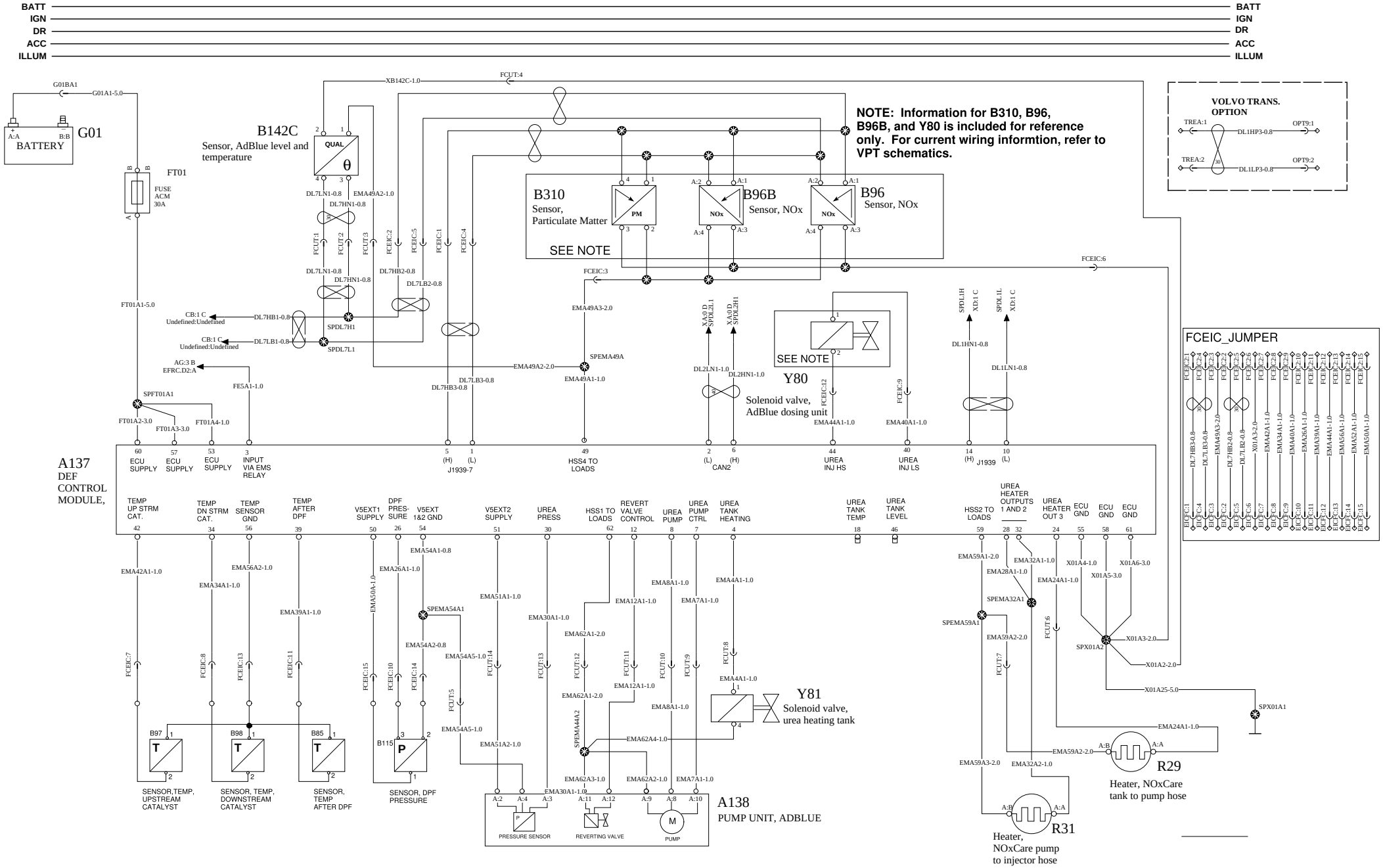

VOLVO Group Trucks Technology	Document title 12V SCHEMATIC VOLVO Document type PRODUCT SCHEMATIC	Document No 21849527	Issue 08	Volume 1 (2)	Page 34 (108)

ENGINE CONTROL ISX-G 1/2

WIRING DIAGRAM: CL

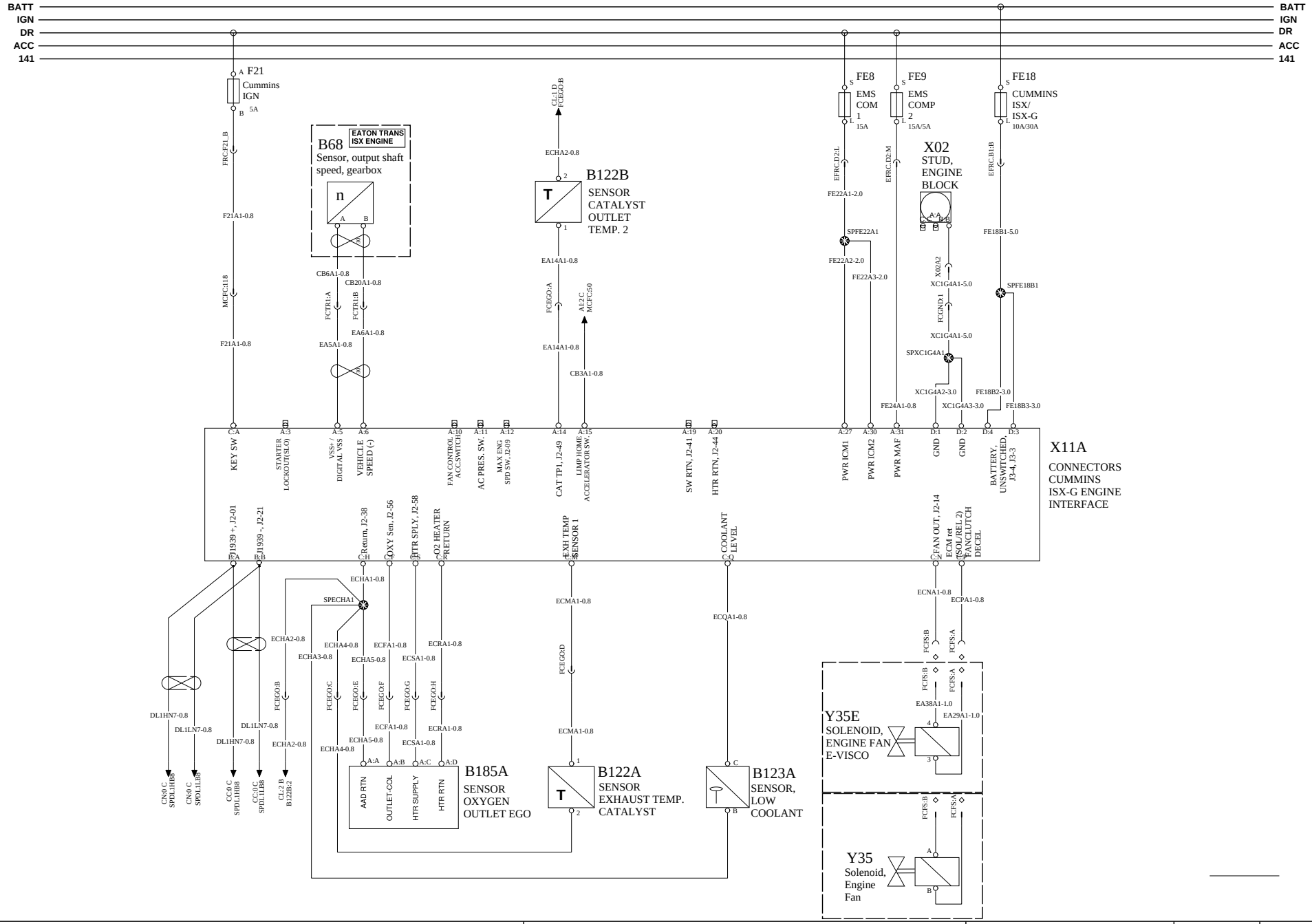

VOLVO Group Trucks Technology	Document title 12V SCHEMATIC VOLVO	Document No	Issue	Volume	Page
	Document type PRODUCT SCHEMATIC	21849527	08	1 (2)	35 (108)

METHANE DETECTION

WIRING DIAGRAM: CM

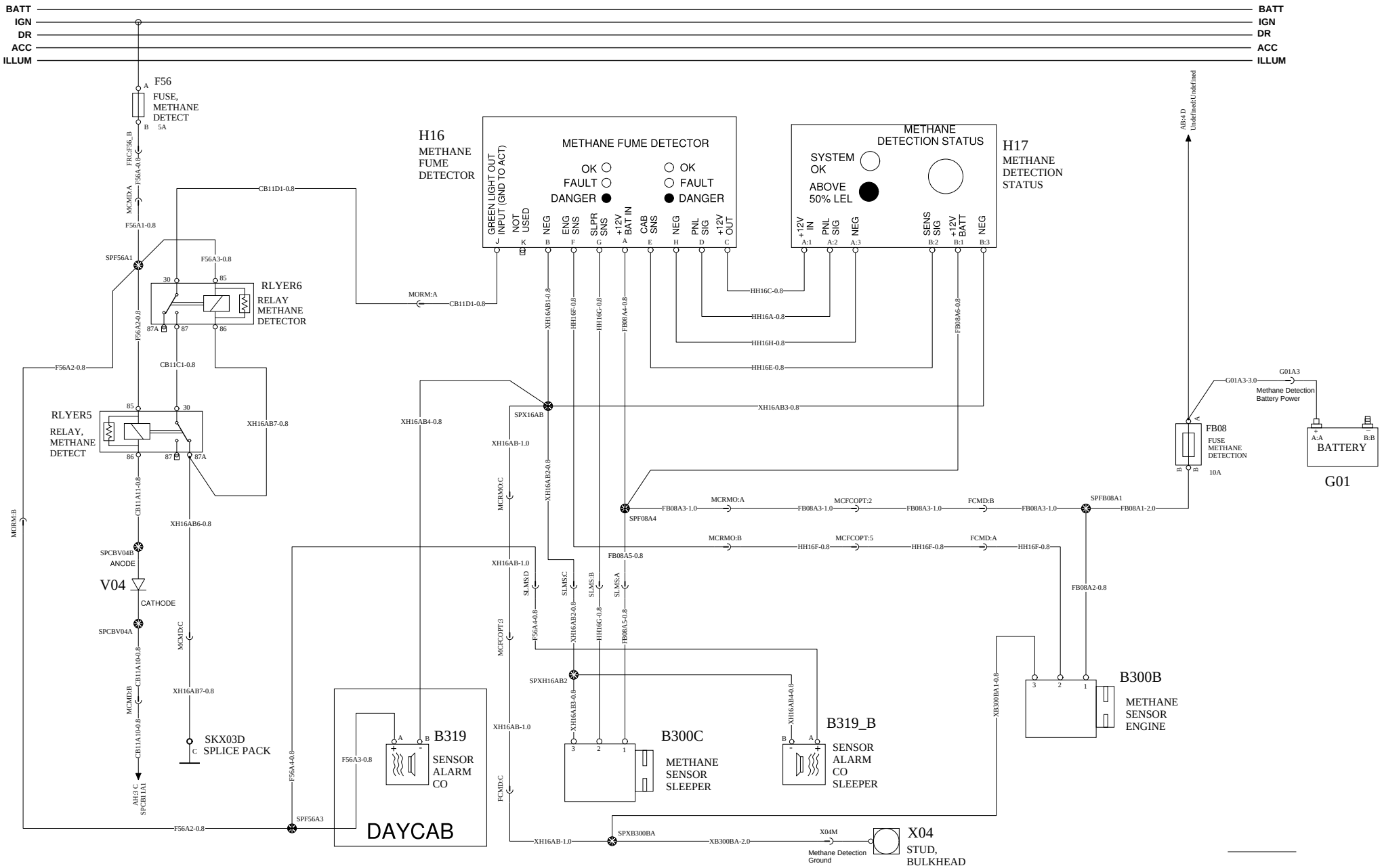

VOLVO Group Trucks Technology	Document title 12V SCHEMATIC VOLVO	Document No	Issue	Volume	Page
	Document type PRODUCT SCHEMATIC	21849527	08	1 (2)	36 (108)

ENGINE CONTROL ISX US17 1/2

WIRING DIAGRAM : CN

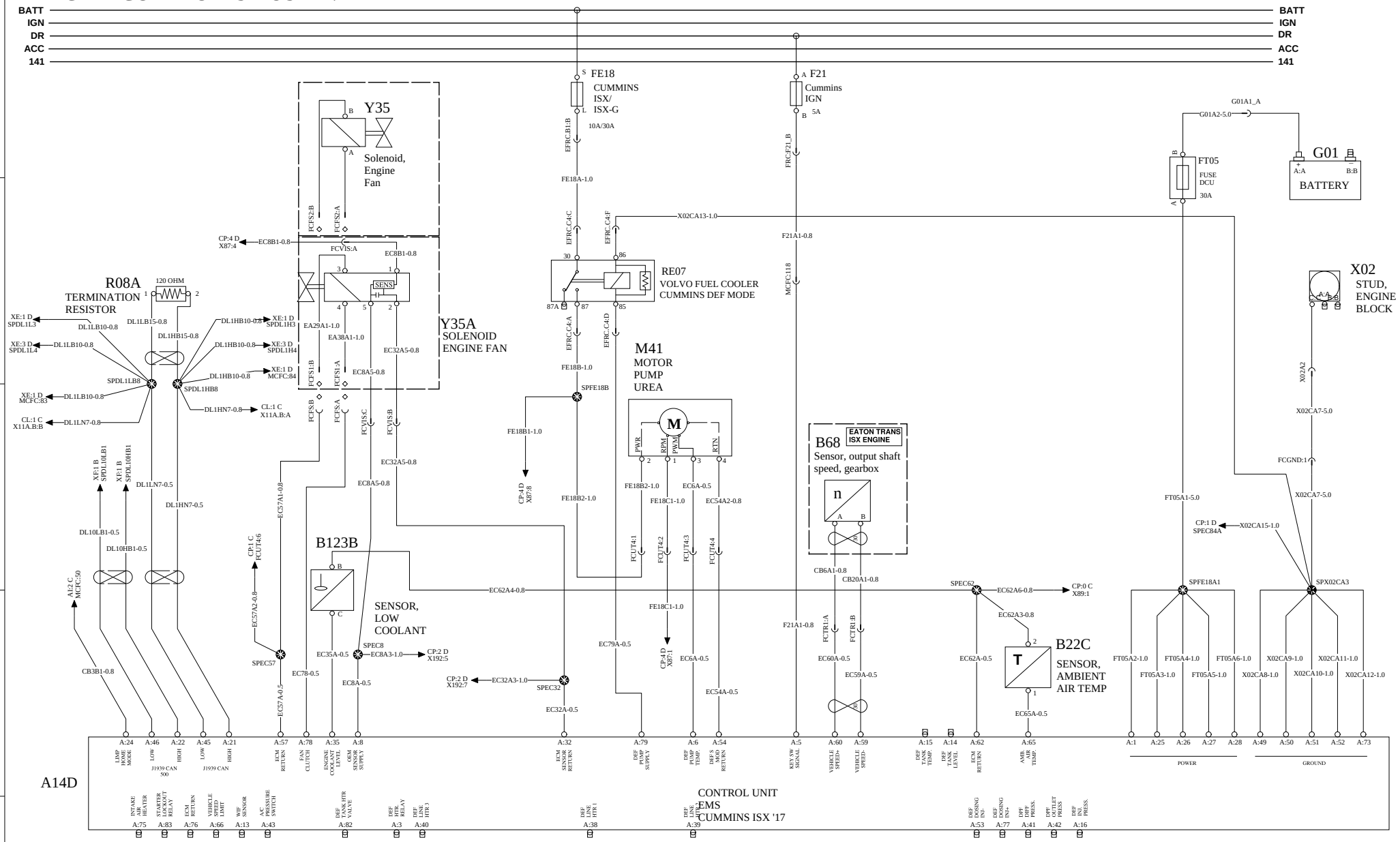

Document title	Document No	Issue	Volume	Page
12V SCHEMATIC VOLVO	21849527	08	1 (2)	37 (108)
Document type: PRODUCT SCHEMATIC				

VOLVO Group Trucks Technology

ENGINE CONTROL ISX US17 2/2

WIRING DIAGRAM : CP

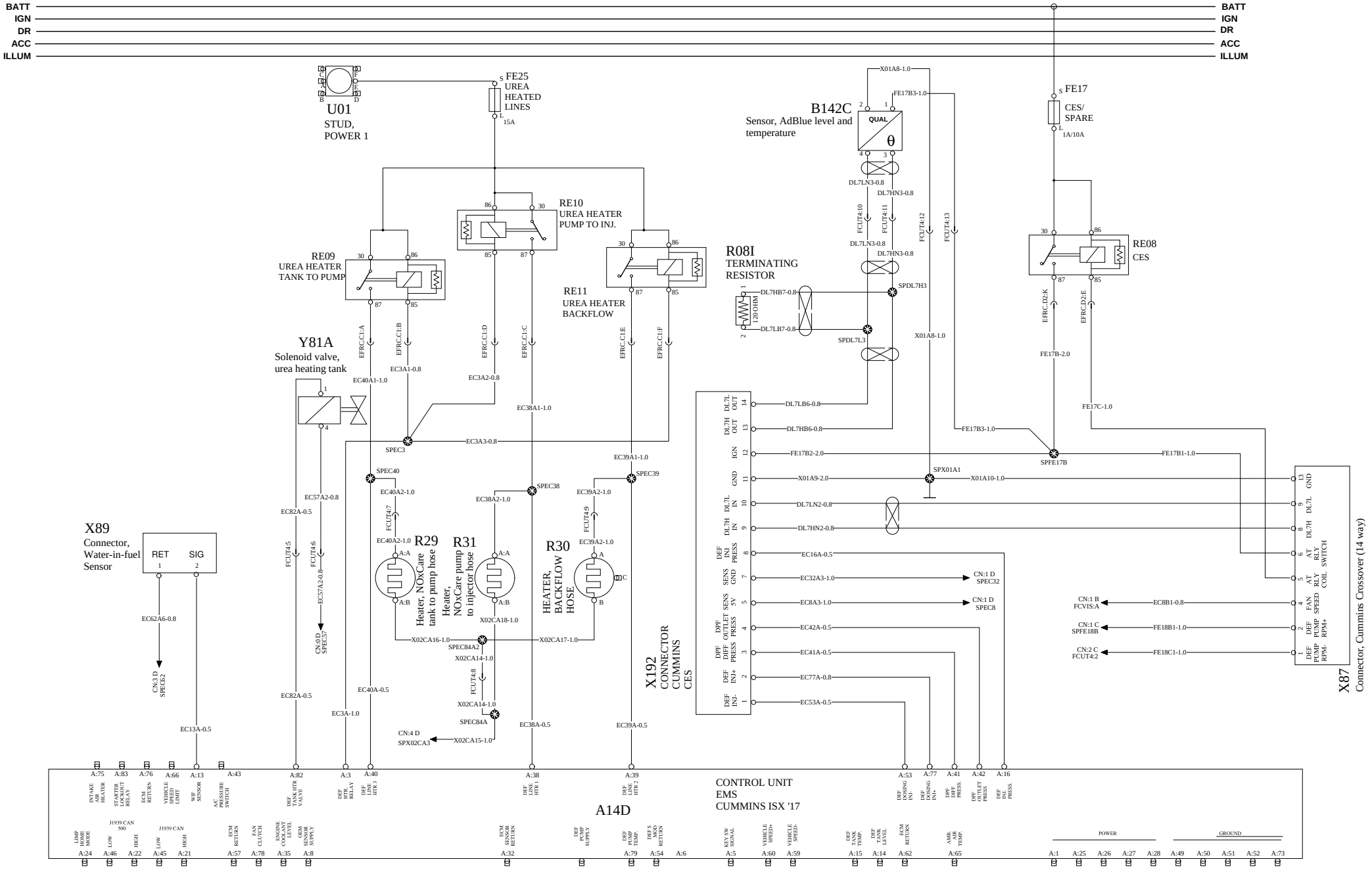

VOLVO Group Trucks Technology	Document title: 12V SCHEMATIC VOLVO Document type: PRODUCT SCHEMATIC	Document No: 21849527	Issue: 08 · Volume: 1 (2) · Page: 38 (108)

TRANSMISSION I-SHIFT

WIRING DIAGRAM: DA

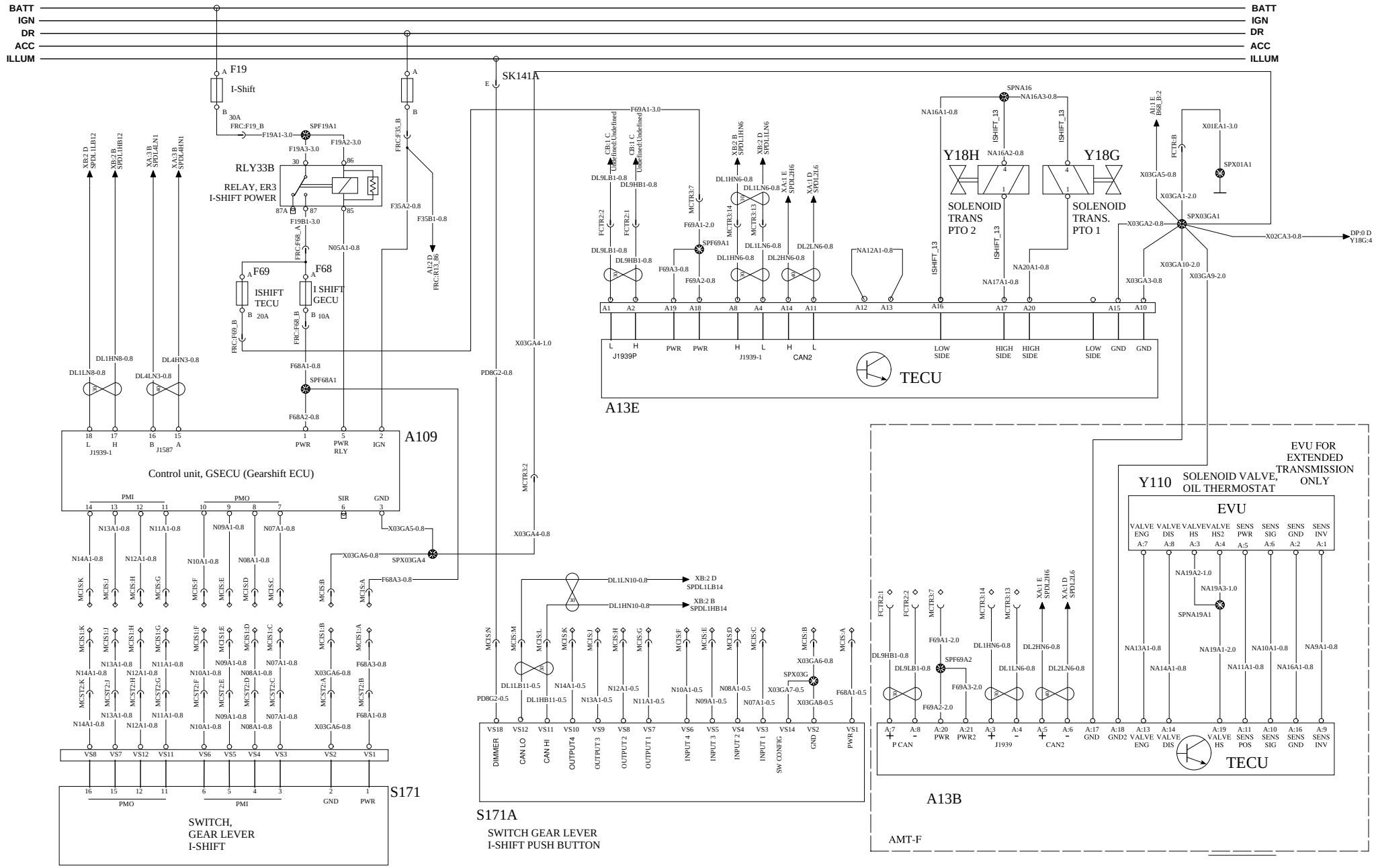

VOLVO Group Trucks Technology	Document title 12V SCHEMATIC VOLVO	Document No	Issue	Volume	Page
	Document type PRODUCT SCHEMATIC	21849527	08	1 (2)	39 (108)

TRANSMISSION CONTROL EATON AUTOMATICS

WIRING DIAGRAM: DB

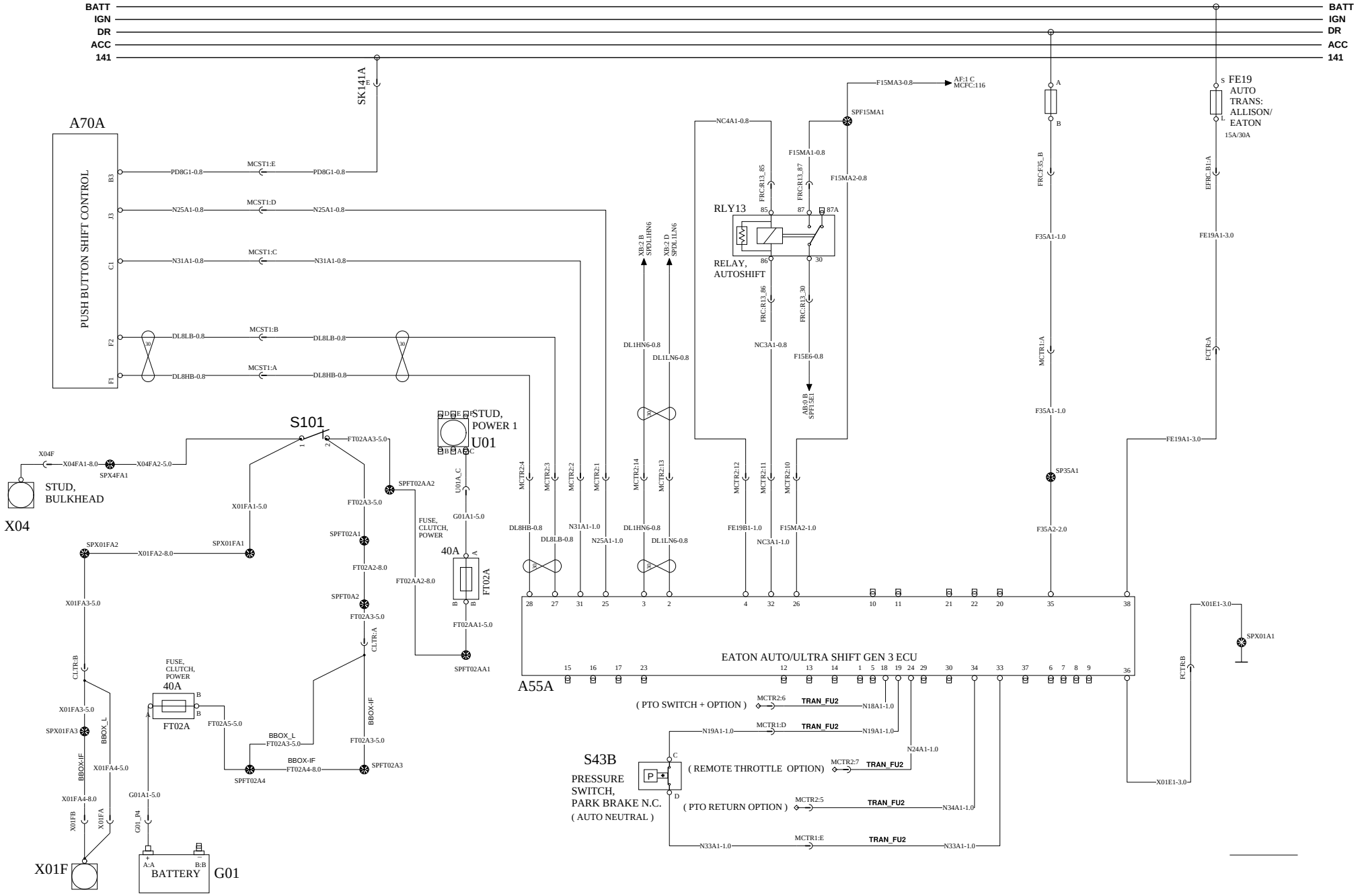

VOLVO Group Trucks Technology	Document title 12V SCHEMATIC VOLVO Document type PRODUCT SCHEMATIC	Document No 21849527	Issue 08	Volume 1 (2)	Page 40 (108)

TRANSMISSION CONTROL 5TH GENERATION 1/2

WIRING DIAGRAM: DE

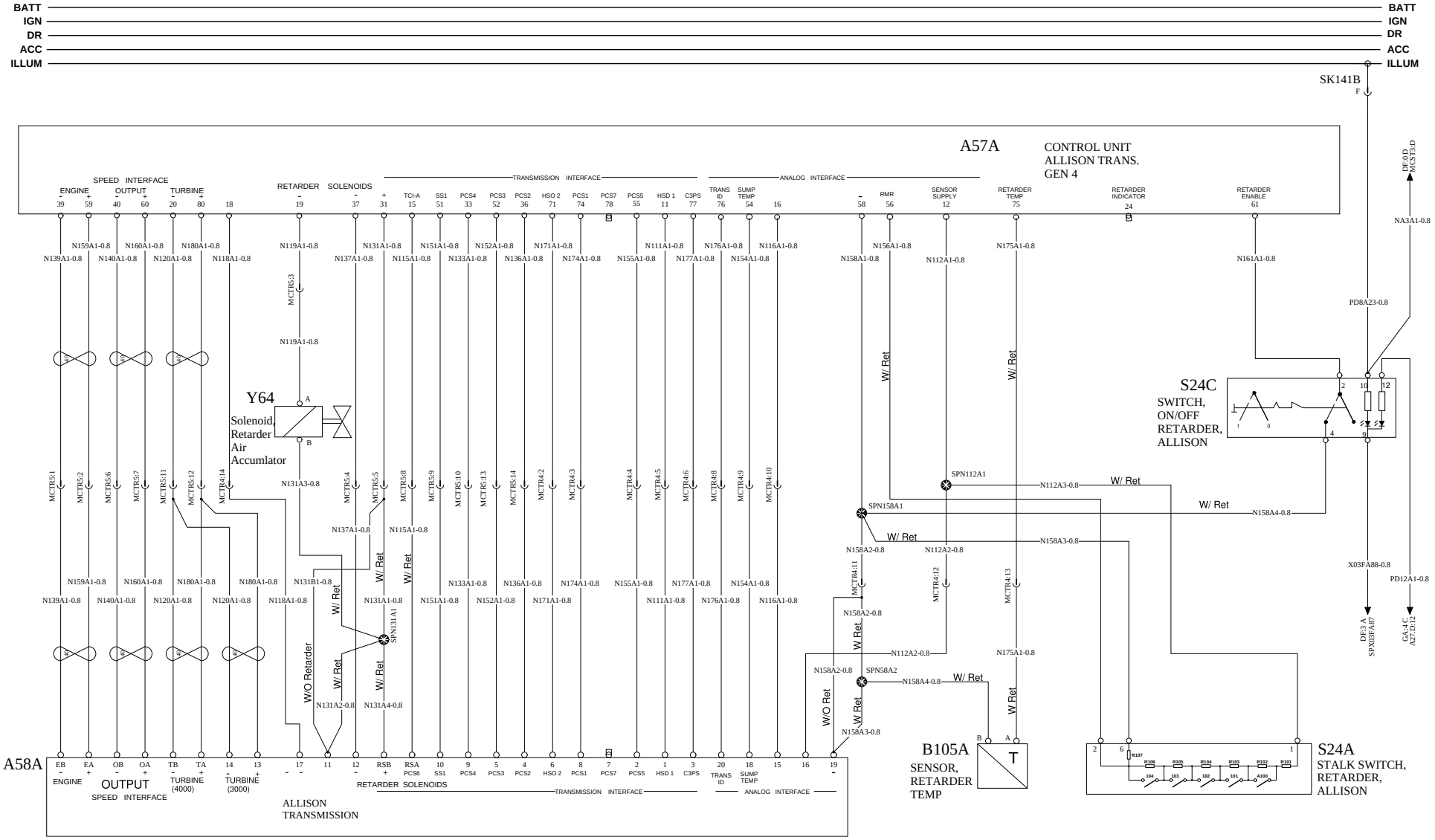

Document title	Document No	Issue	Volume	Page
12V SCHEMATIC VOLVO	21849527	08	1 (2)	41 (108)
Document type: PRODUCT SCHEMATIC				

VOLVO Group Trucks Technology

TRANSMISSION CONTROL 5TH GENERATION 2/2

WIRING DIAGRAM: DF

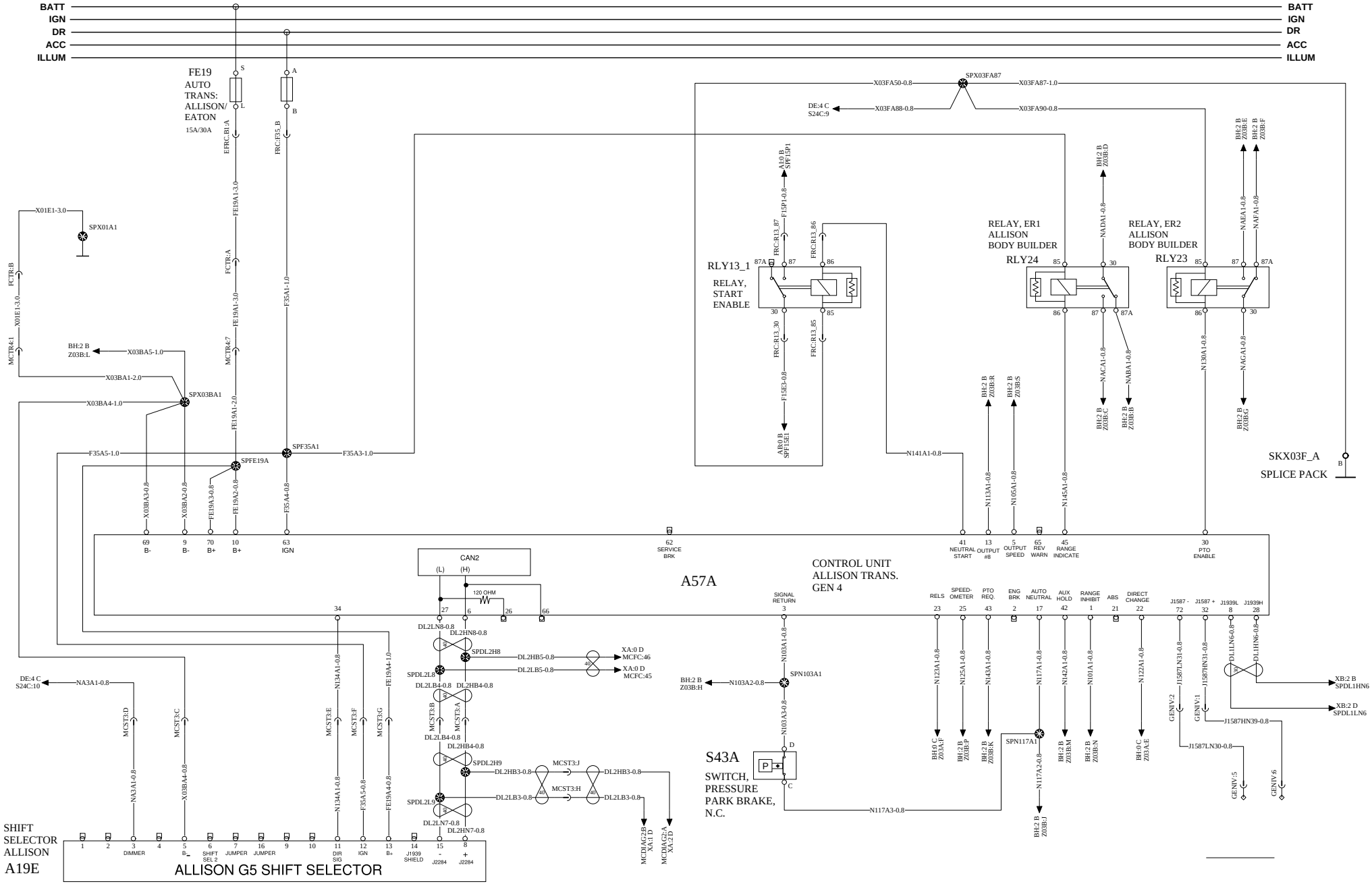

VOLVO Group Trucks Technology	Document title 12V SCHEMATIC VOLVO Document type PRODUCT SCHEMATIC	Document No 21849527	Issue 08	Volume 1 (2)	Page 42 (108)

WIRING DIAGRAM: DP

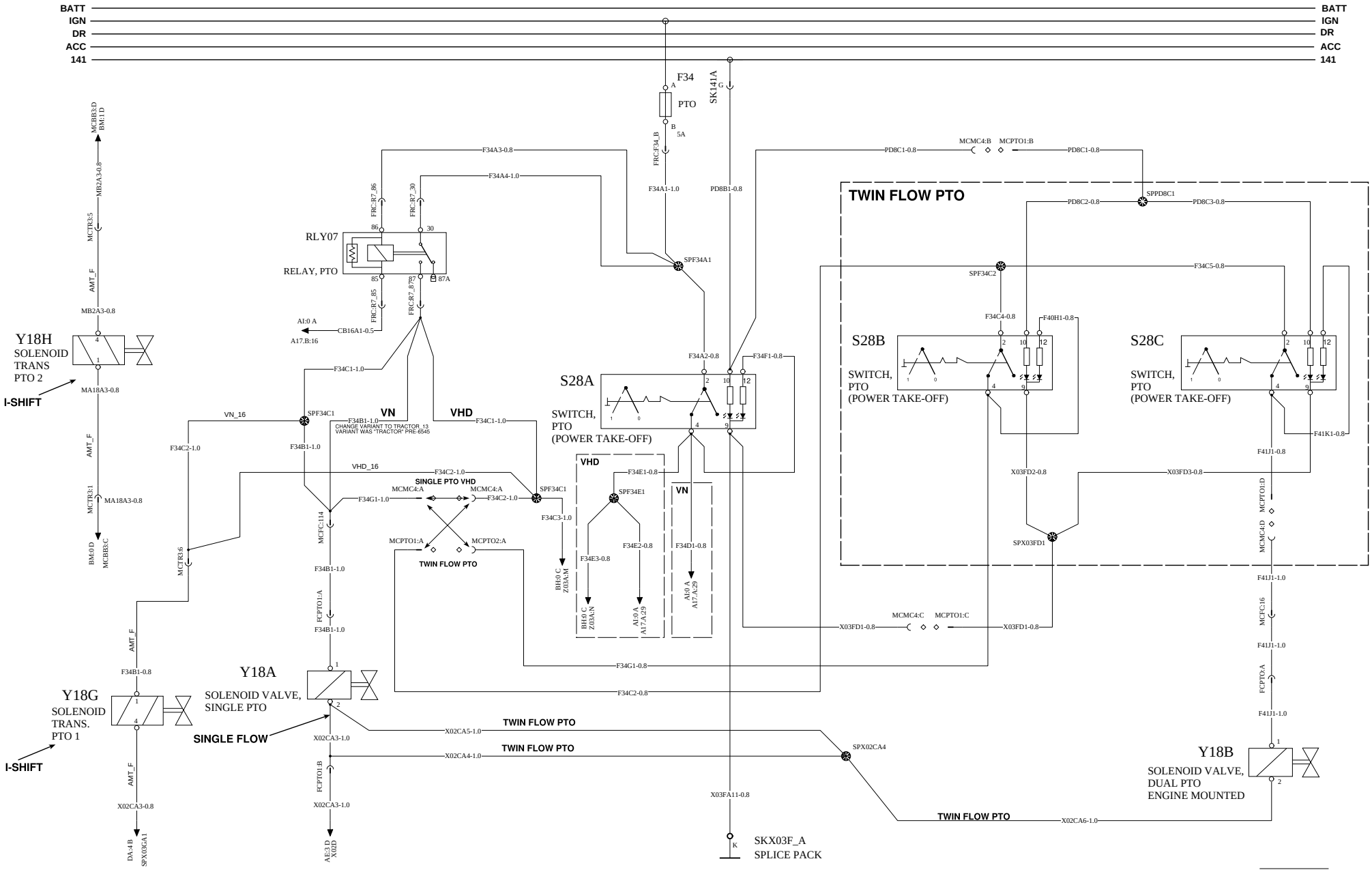

VOLVO Group Trucks Technology	Document title 12V SCHEMATIC VOLVO Document type PRODUCT SCHEMATIC	Document No 21849527	Issue 08	Volume 1 (2)	Page 43 (108)

ABS CONTROL WABCO

WIRING DIAGRAM: EA

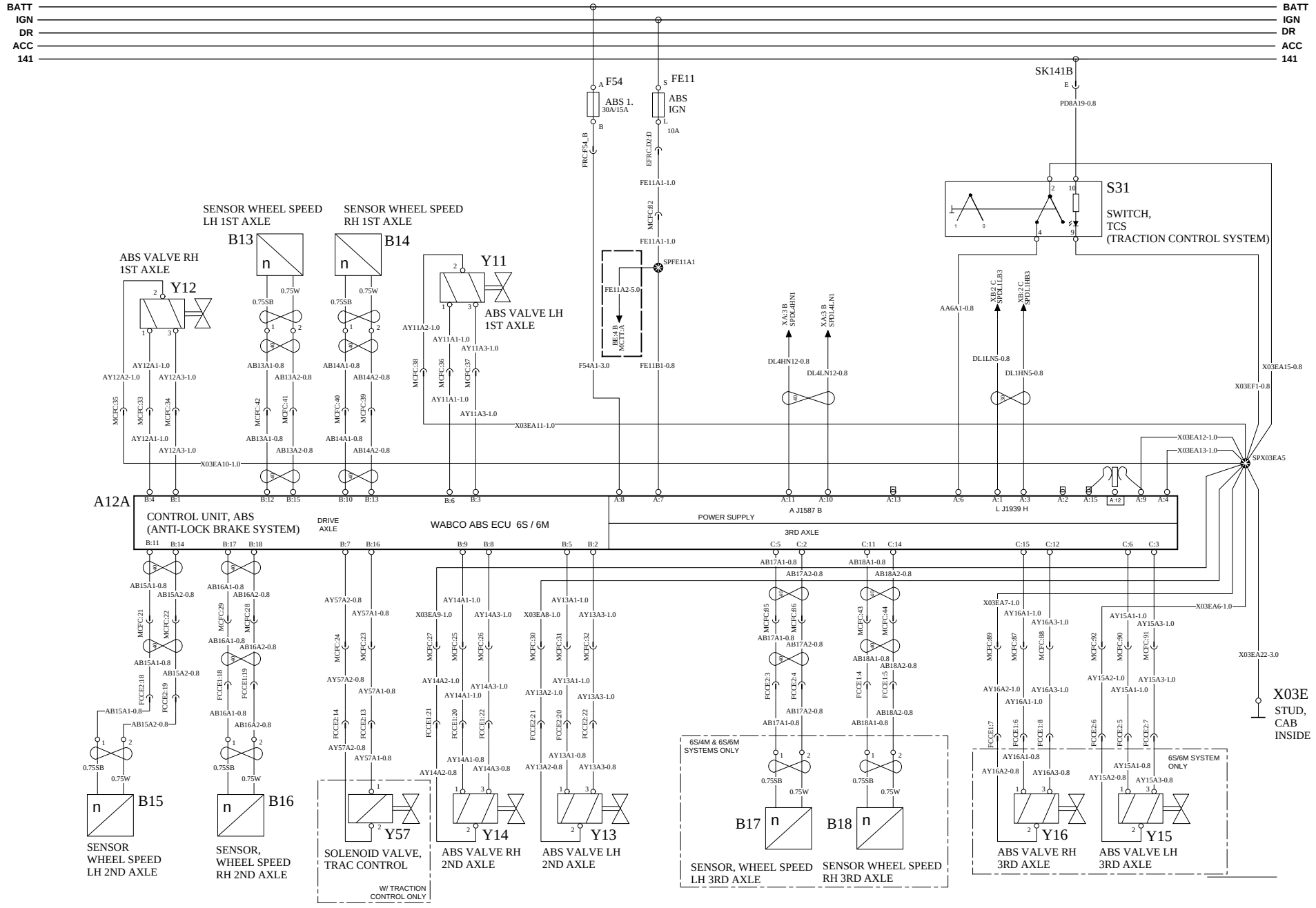

VOLVO Group Trucks Technology	Document title 12V SCHEMATIC VOLVO	Document No	Issue	Volume	Page
	Document type PRODUCT SCHEMATIC	21849527	08	1 (2)	44 (108)

SUSPENSION ECU 2013

WIRING DIAGRAM: EB

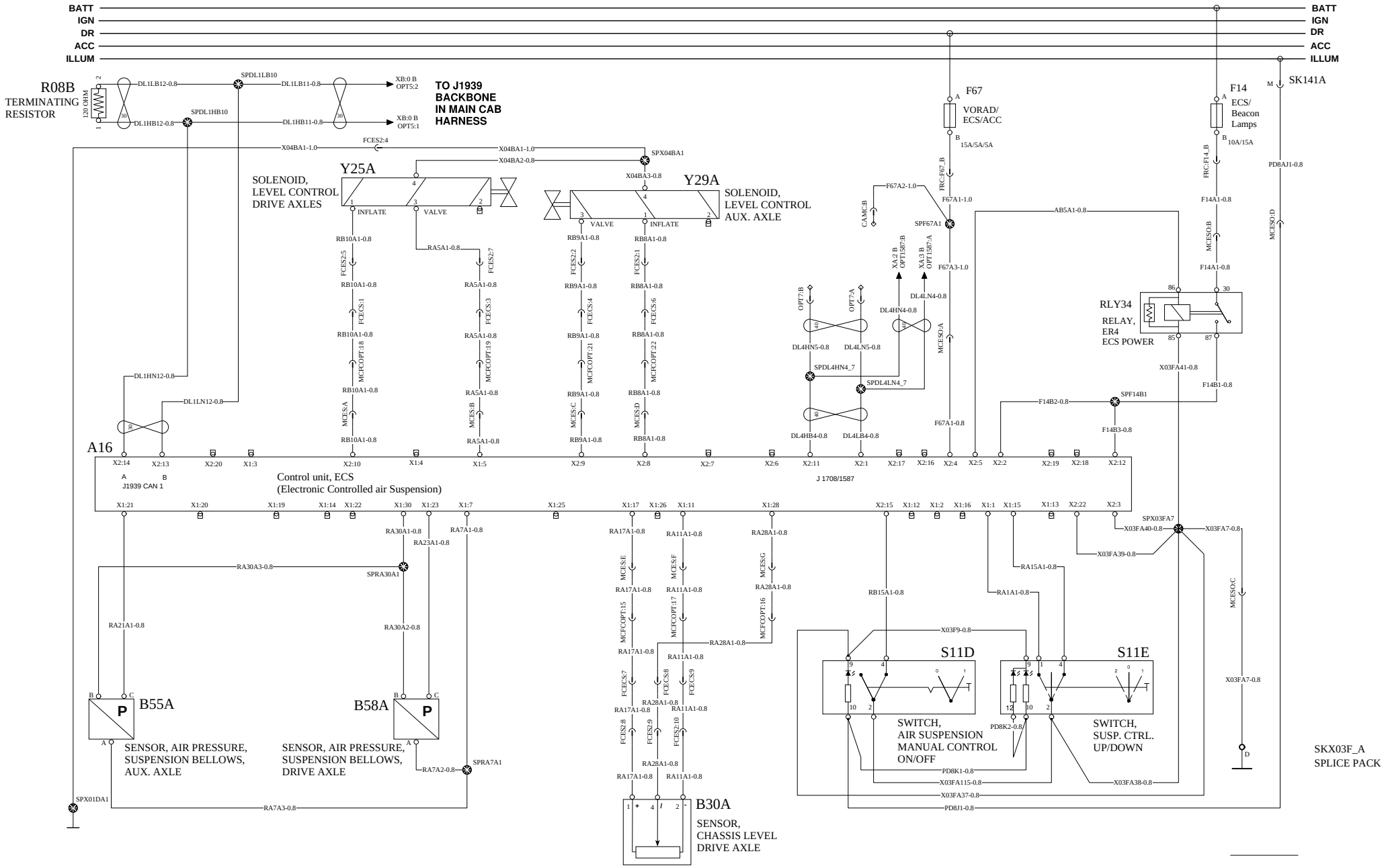

VOLVO Group Trucks Technology	Document title 12V SCHEMATIC VOLVO Document type PRODUCT SCHEMATIC	Document No 21849527	Issue 08	Volume 1 (2)	Page 45 (108)

ABS6 CONTROL BENDIX 1/3

WIRING DIAGRAM: EC

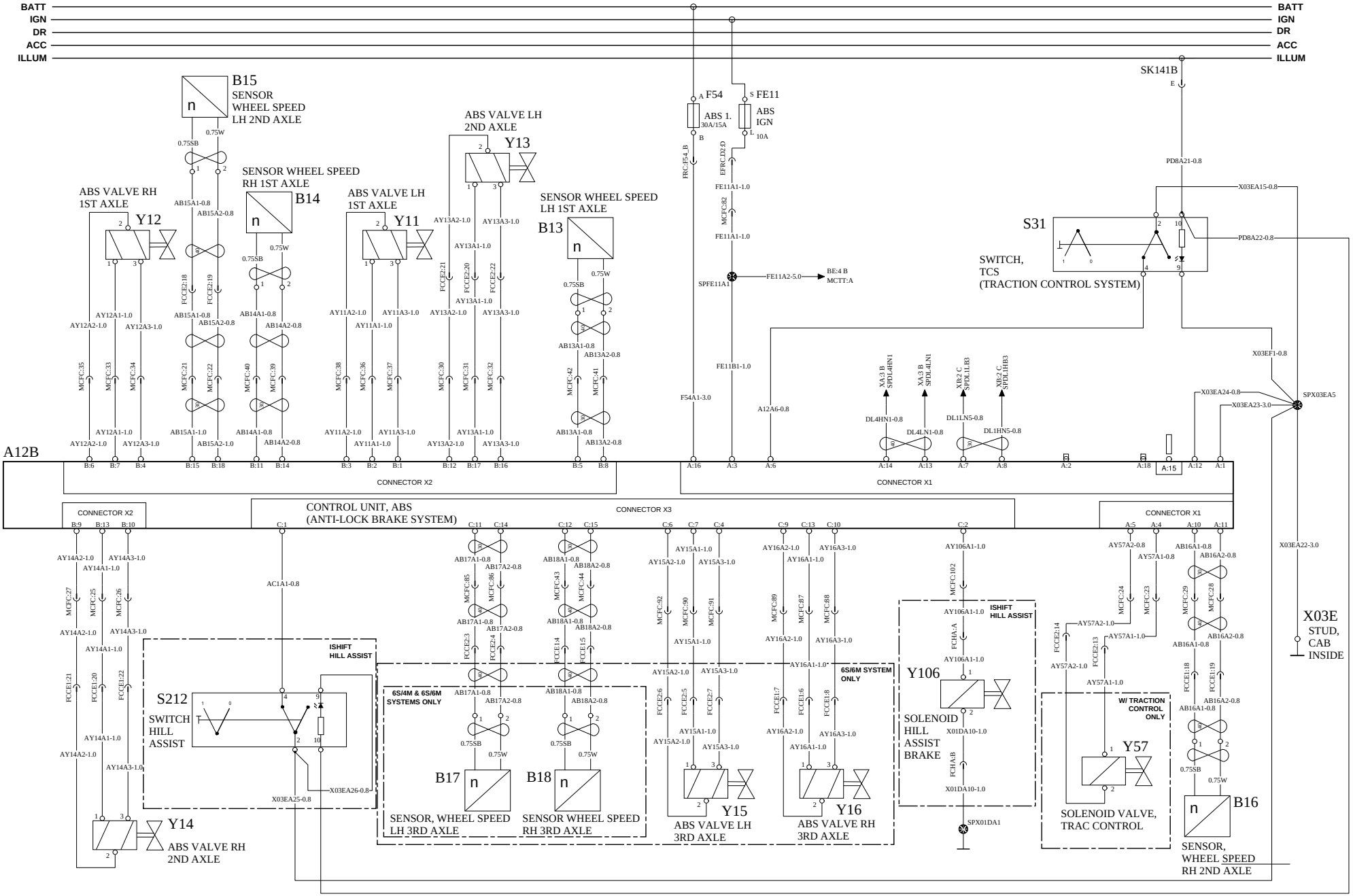

VOLVO Group Trucks Technology	Document title 12V SCHEMATIC VOLVO	Document No	Issue	Volume	Page
	Document type PRODUCT SCHEMATIC	21849527	08	1 (2)	46 (108)

ABS CONTROL BENDIX ESC (ELECTRONIC STABILITY CONTROL) WIRING DIAGRAM: ED

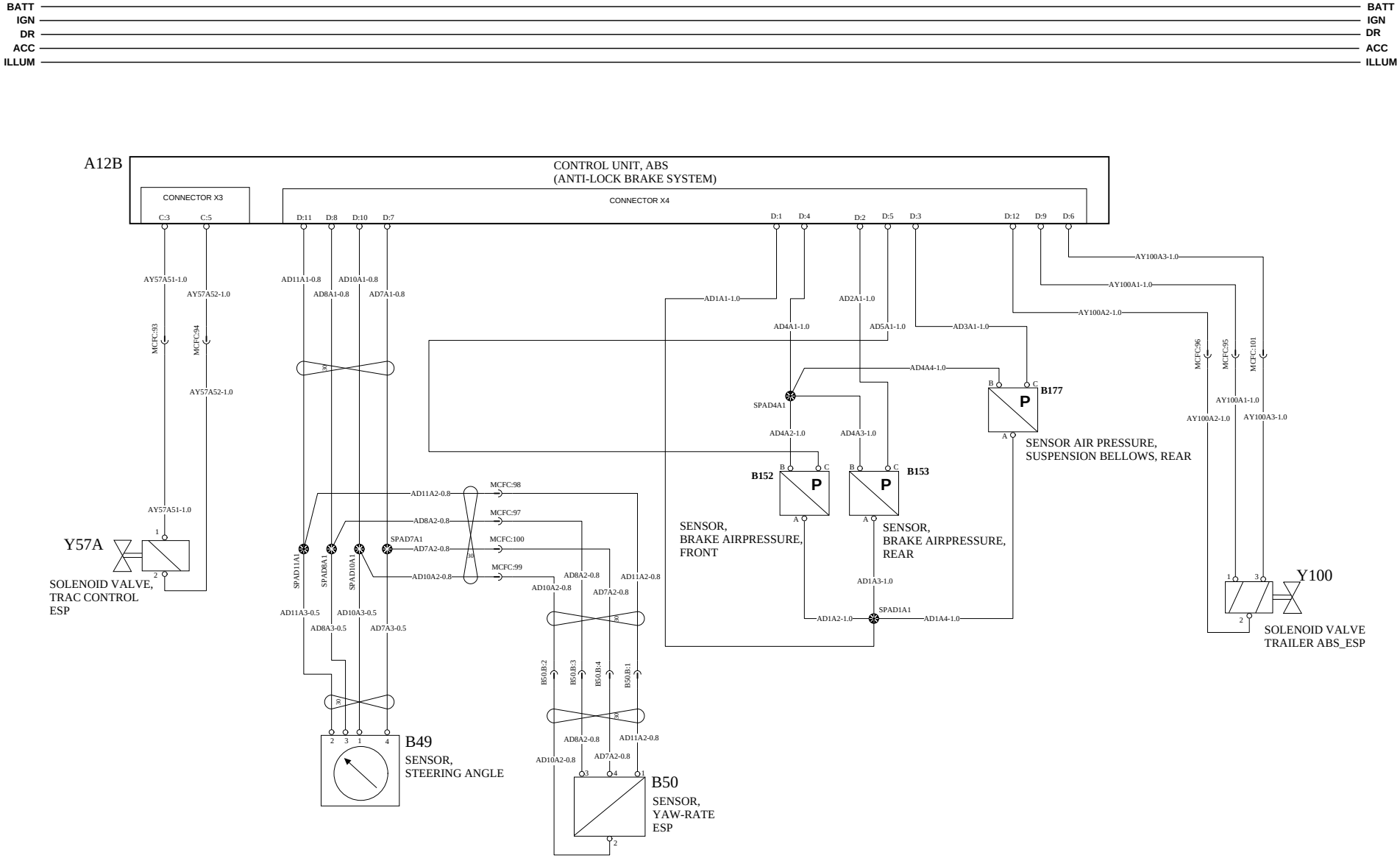

VOLVO Group Trucks Technology	Document title 12V SCHEMATIC VOLVO	Document No	Issue	Volume	Page
	Document type PRODUCT SCHEMATIC	21849527	08	1 (2)	47 (108)

ABS8 CONTROL BENDIX 3/3

WIRING DIAGRAM: EG

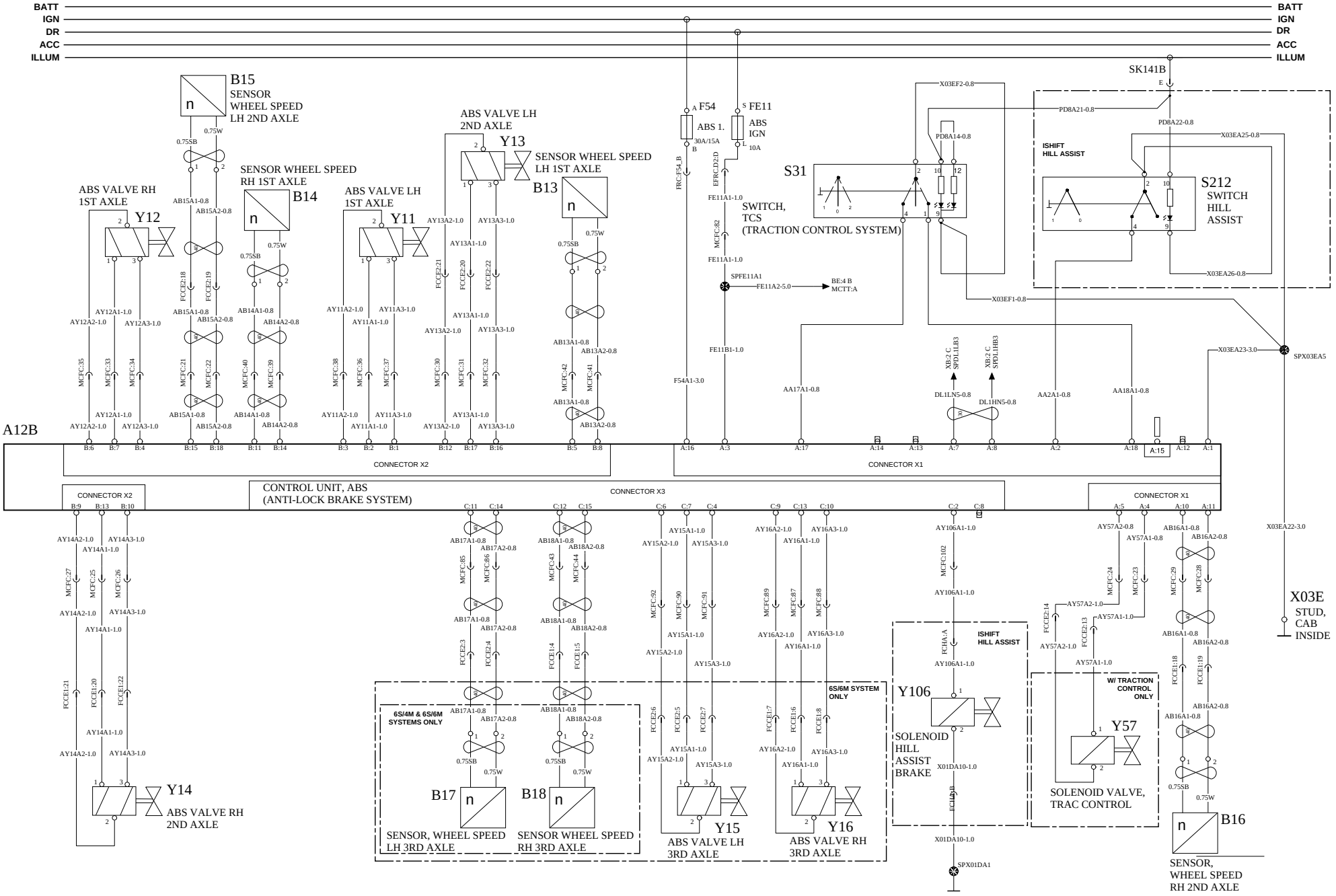

VOLVO Group Trucks Technology	Document title 12V SCHEMATIC VOLVO Document type PRODUCT SCHEMATIC	Document No 21849527	Issue 08	Volume 1 (2)	Page 48 (108)

SUSPENSION ECU 6X2 2016

WIRING DIAGRAM: EH

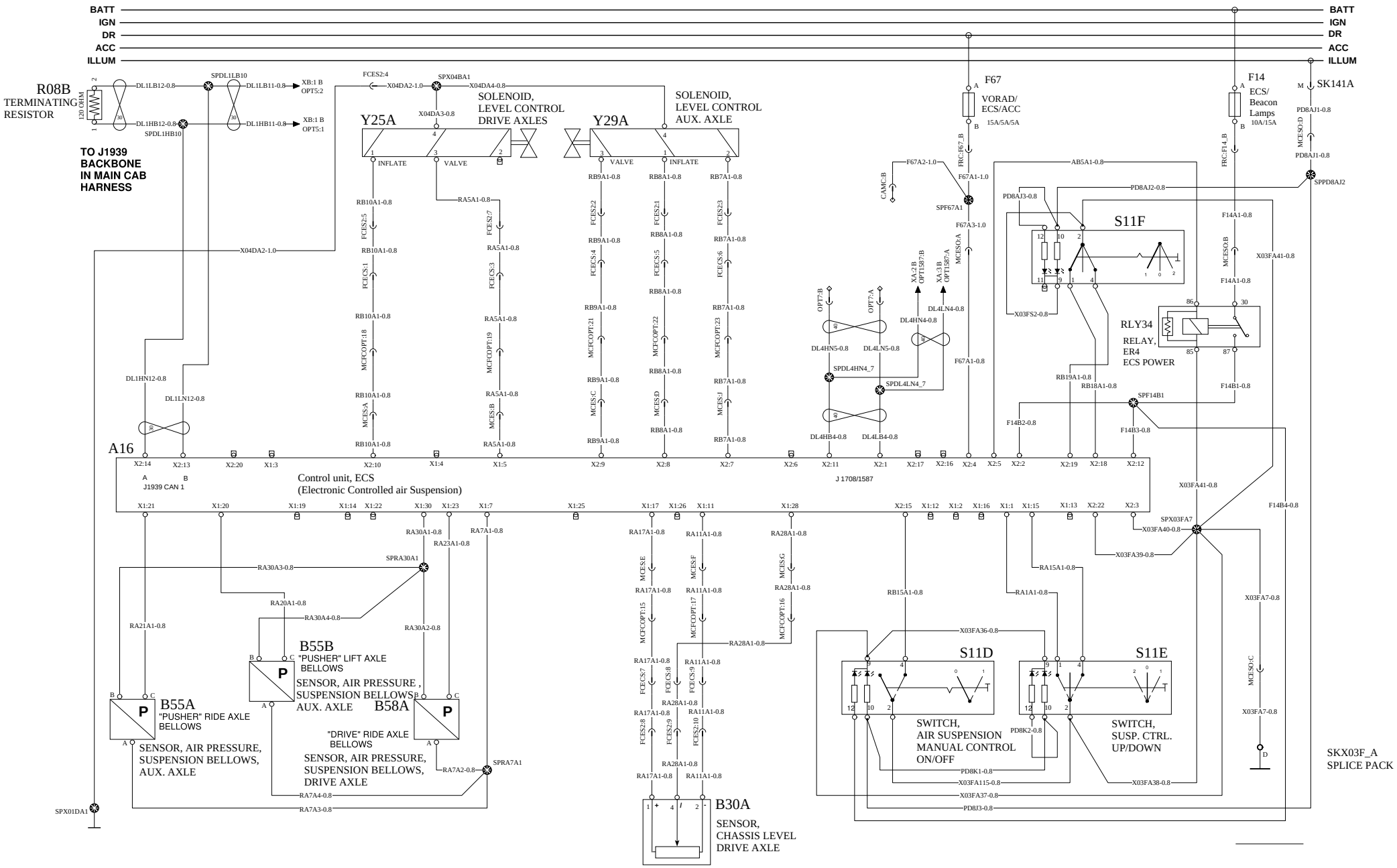

VOLVO Group Trucks Technology	Document title 12V SCHEMATIC VOLVO	Document No	Issue	Volume	Page
	Document type PRODUCT SCHEMATIC	21849527	08	1 (2)	49 (108)

AIR DRYER/HEATED DRAIN VALVE

WIRING DIAGRAM: FA

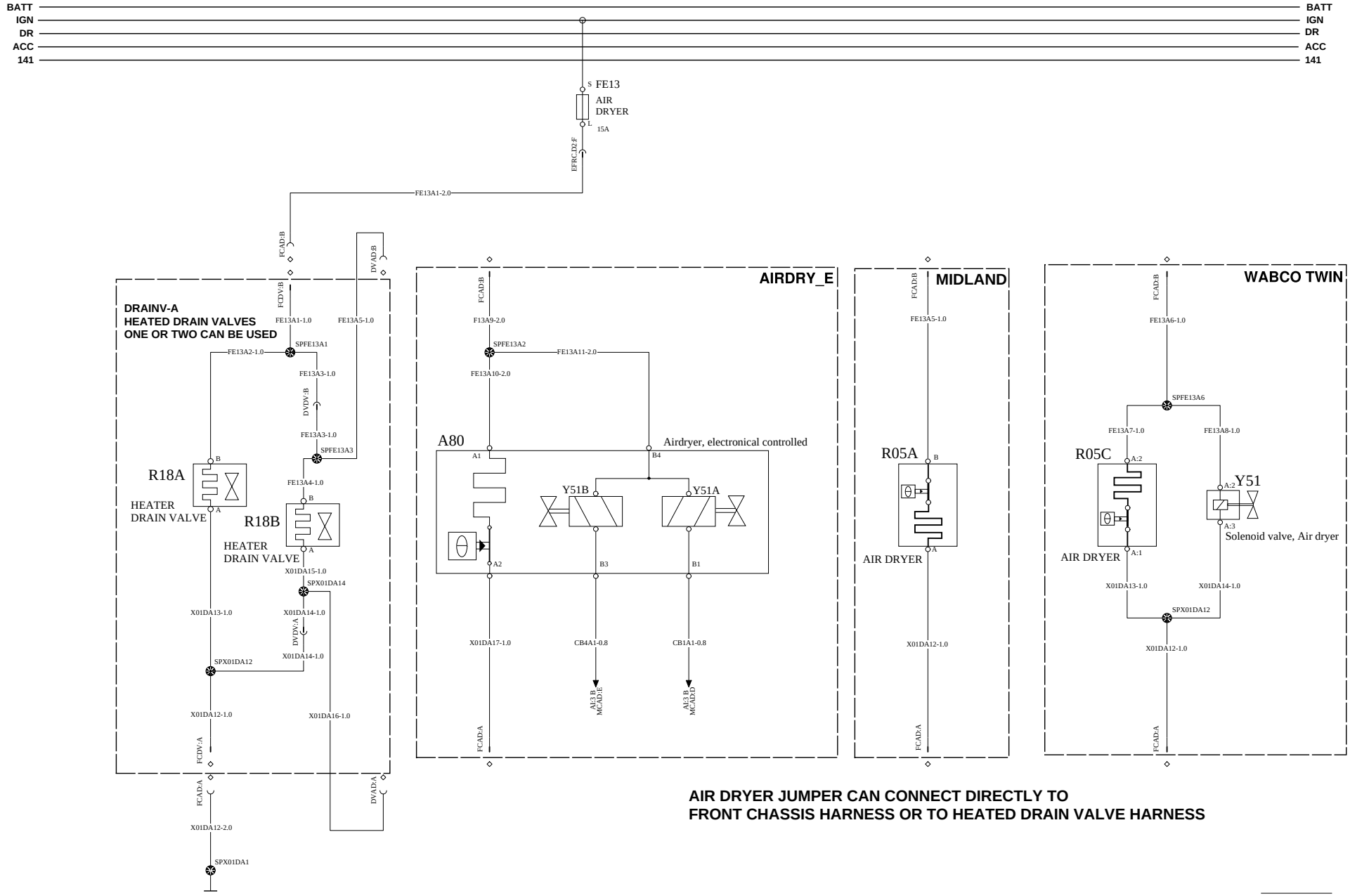

VOLVO Group Trucks Technology	Document title 12V SCHEMATIC VOLVO	Document No	Issue	Volume	Page
	Document type PRODUCT SCHEMATIC	21849527	08	1 (2)	50 (108)

LIFT AXLES VHD

WIRING DIAGRAM: FB

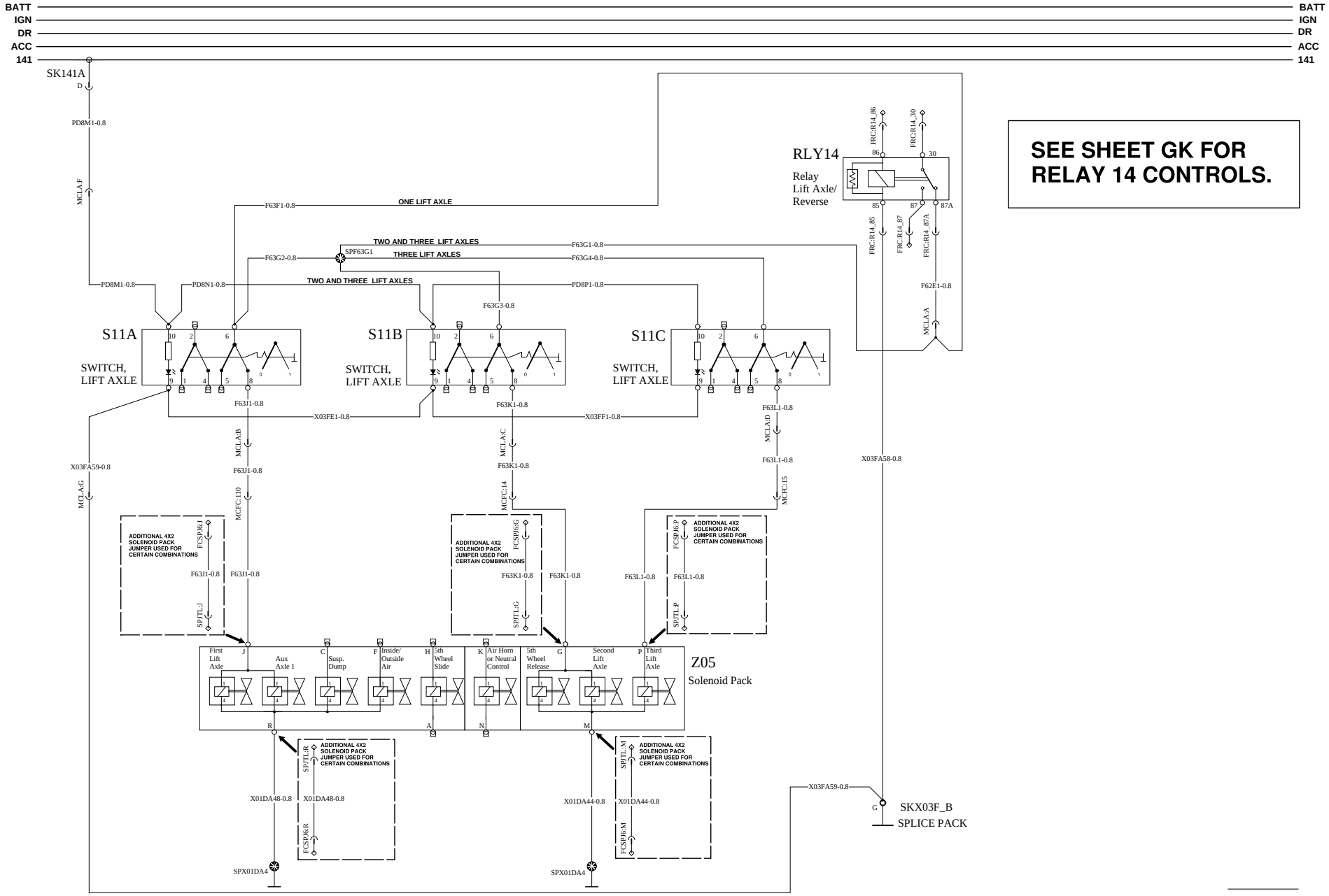

VOLVO Group Trucks Technology	Document title 12V SCHEMATIC VOLVO Document type PRODUCT SCHEMATIC	Document No 21849527	Issue 08	Volume 1 (2)	Page 51 (108)

SUSPENSION DUMP, 5TH WHEEL SLIDE

WIRING DIAGRAM: FC

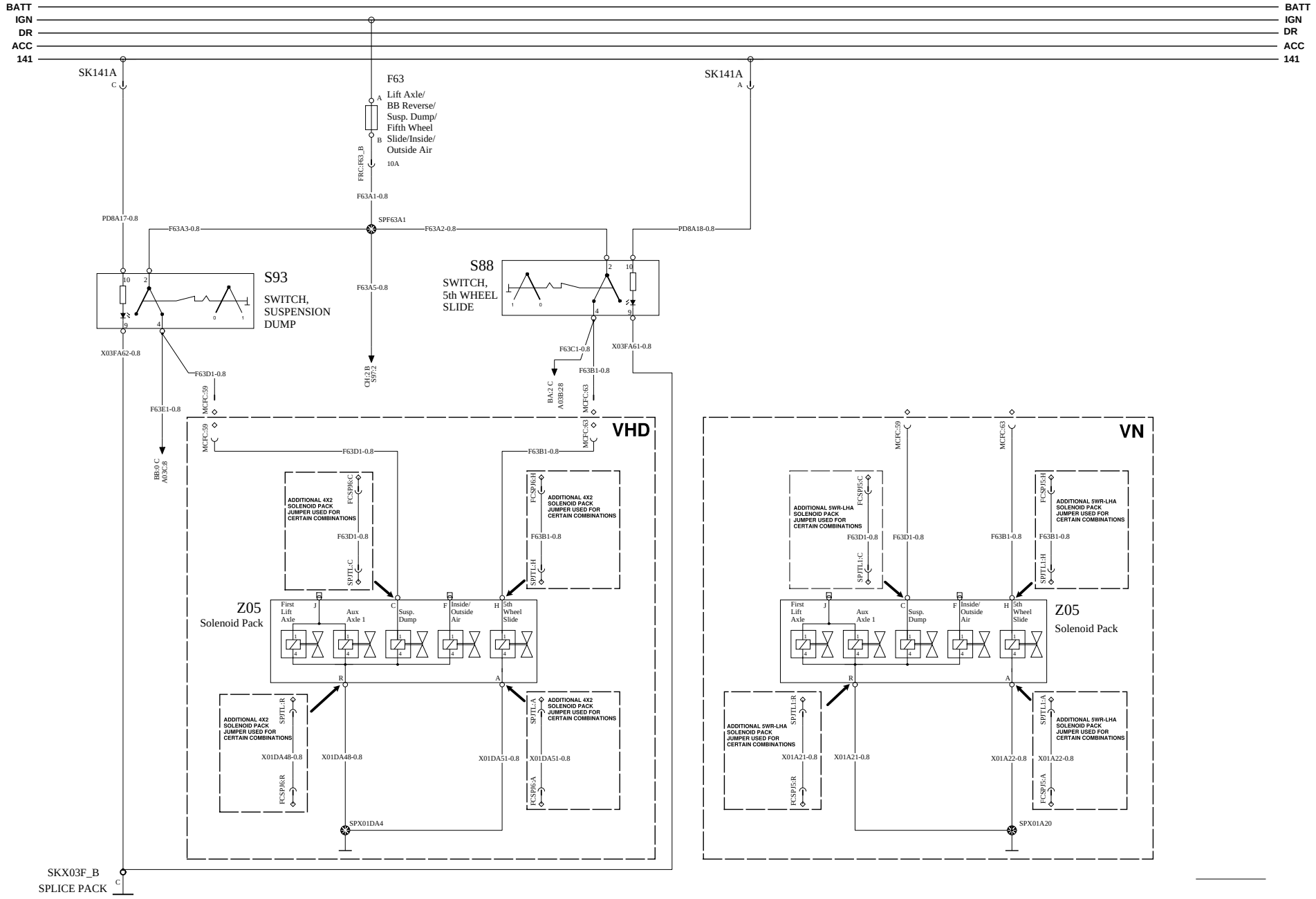

VOLVO Group Trucks Technology	Document title 12V SCHEMATIC VOLVO Document type PRODUCT SCHEMATIC	Document No 21849527	Issue 08	Volume 1 (2)	Page 52 (108)

DIFFERENTIAL LOCK VN/VHD

WIRING DIAGRAM: FD

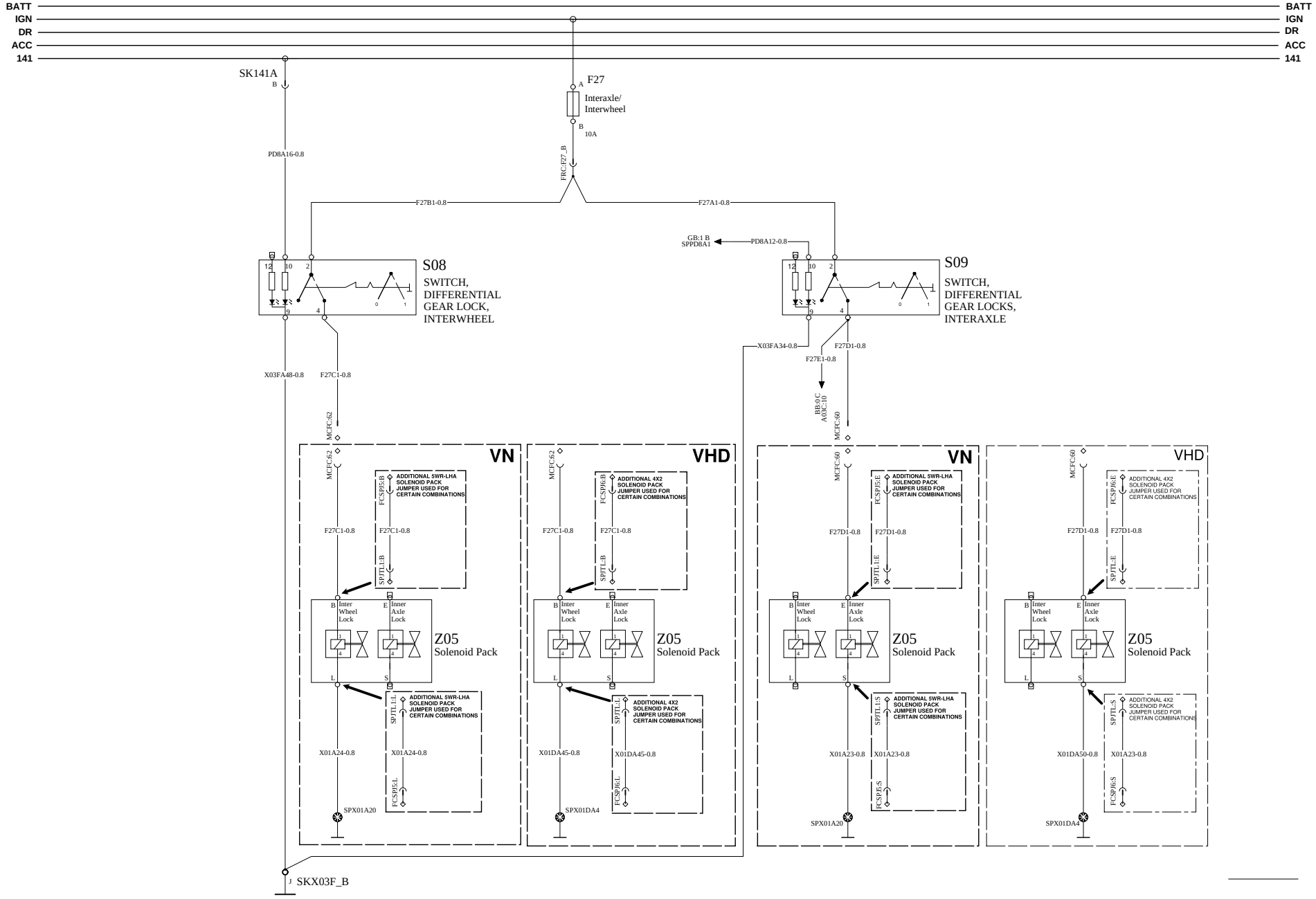

VOLVO Group Trucks Technology	Document title 12V SCHEMATIC VOLVO Document type PRODUCT SCHEMATIC	Document No 21849527	Issue 08	Volume 1 (2)	Page 53 (108)

5TH WHEEL LOCK

WIRING DIAGRAM: FF

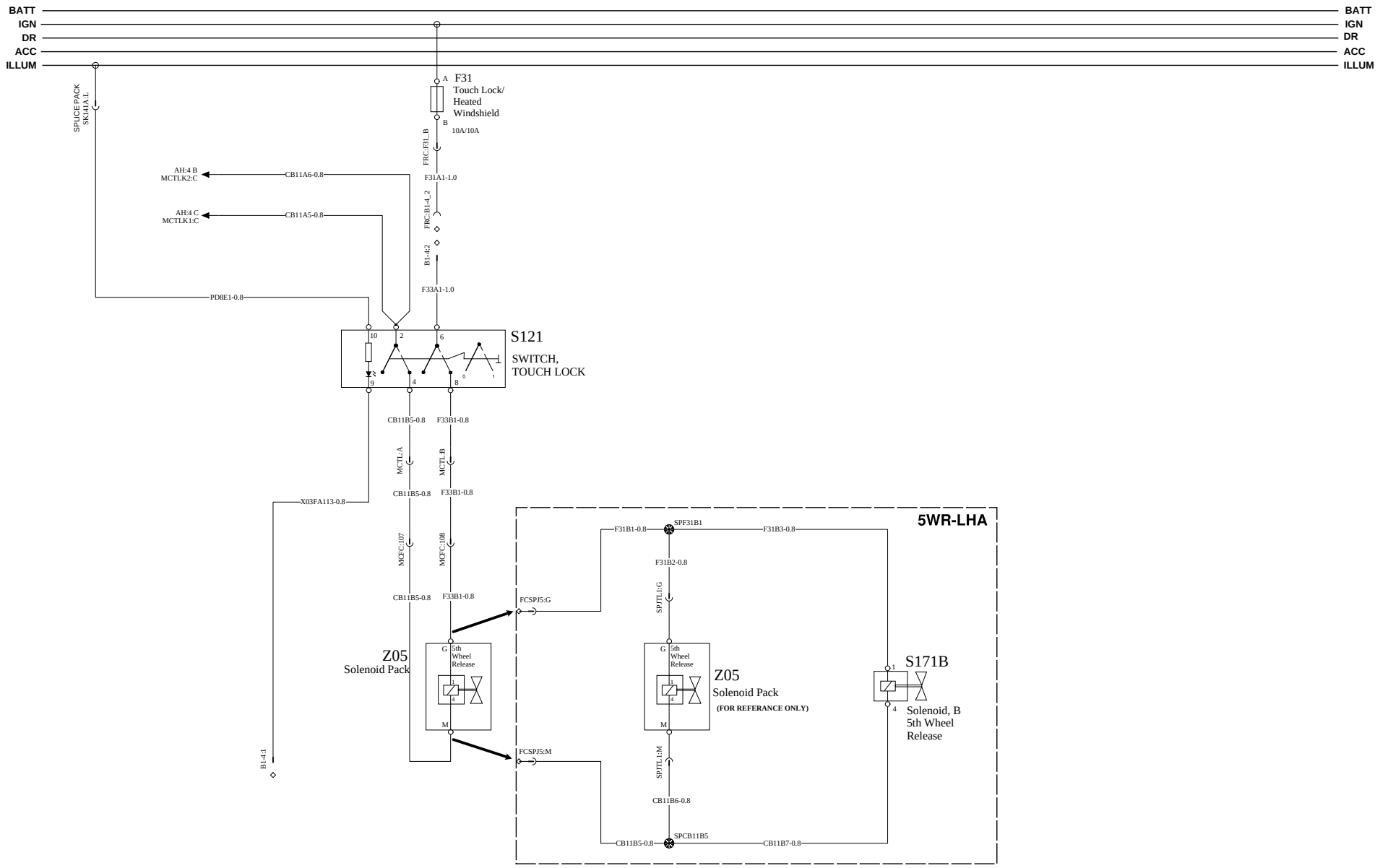

VOLVO Group Trucks Technology	Document title 12V SCHEMATIC VOLVO	Document No	Issue	Volume	Page
	Document type PRODUCT SCHEMATIC	21849527	08	1 (2)	54 (108)

TIRE PRESSURE MONITORING SYSTEM

WIRING DIAGRAM: FG

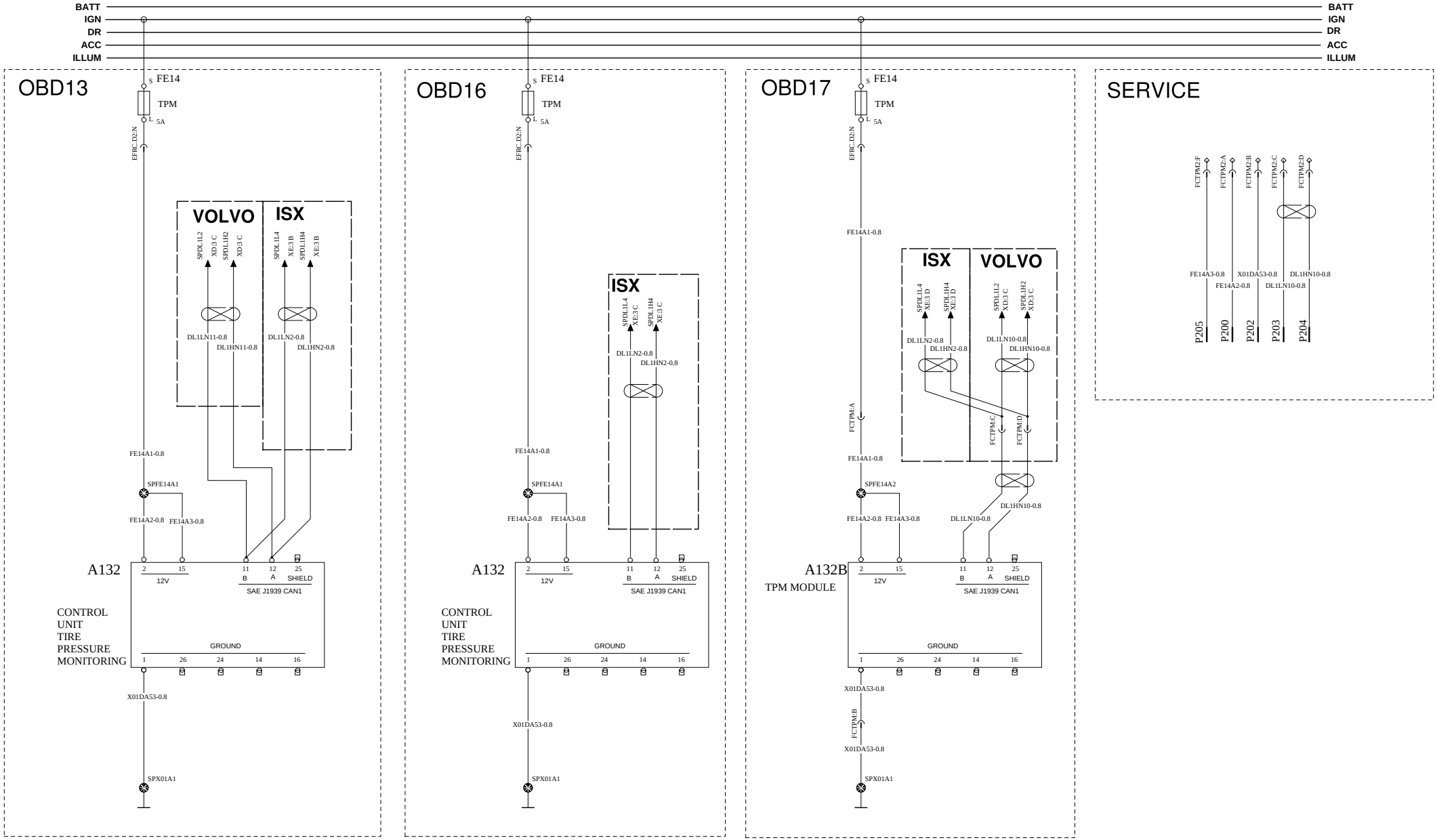

VOLVO Group Trucks Technology	Document title 12V SCHEMATIC VOLVO	Document No	Issue	Volume	Page
	Document type PRODUCT SCHEMATIC	21849527	08	1 (2)	55 (108)

LIGHTING CONTROL 1/2

WIRING DIAGRAM: GA

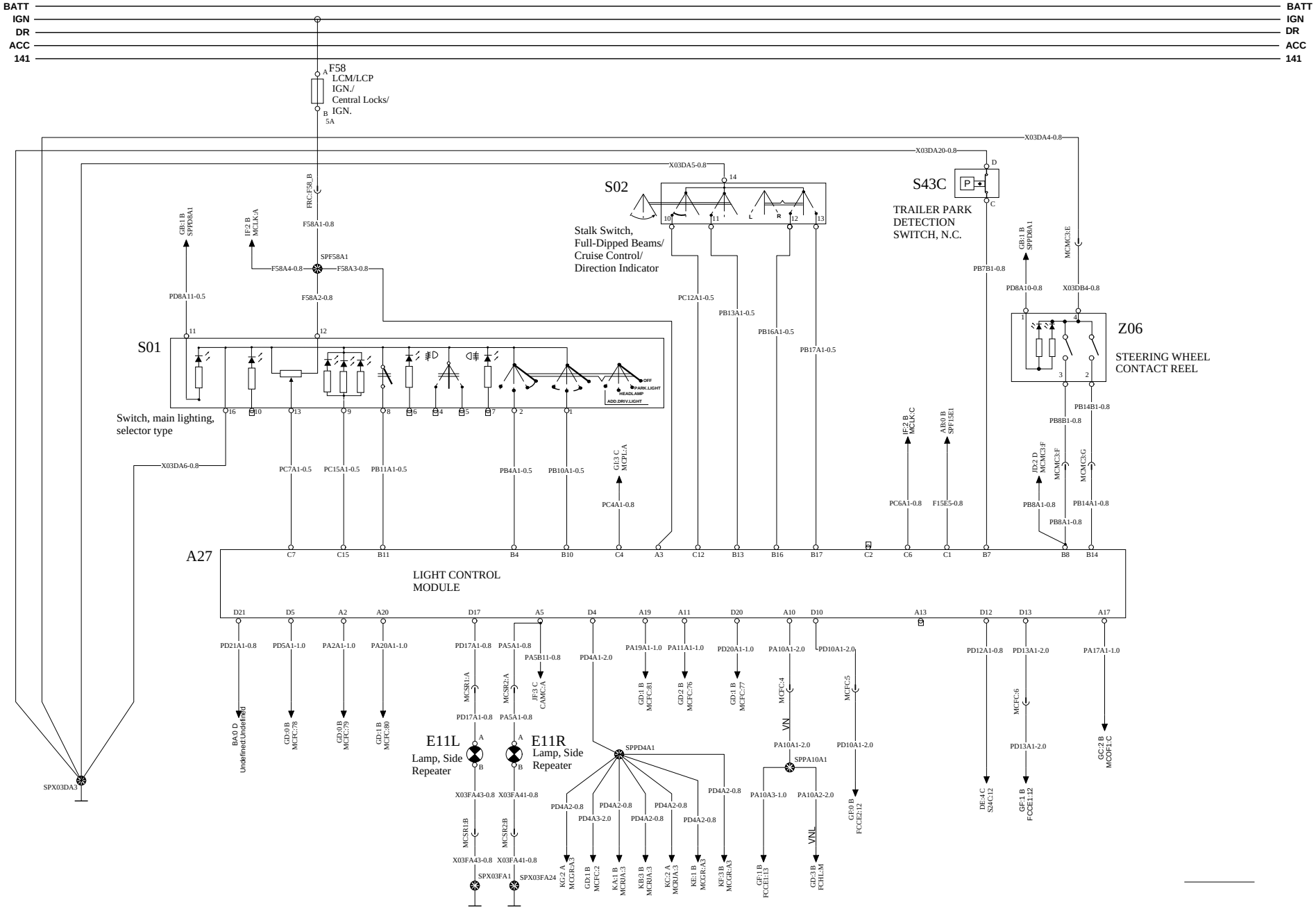

Document title	Document No	Issue	Volume	Page
12V SCHEMATIC VOLVO	21849527	08	1 (2)	56 (108)
Document type: PRODUCT SCHEMATIC				

VOLVO Group Trucks Technology

LIGHTING CONTROL 2/2

WIRING DIAGRAM: GB

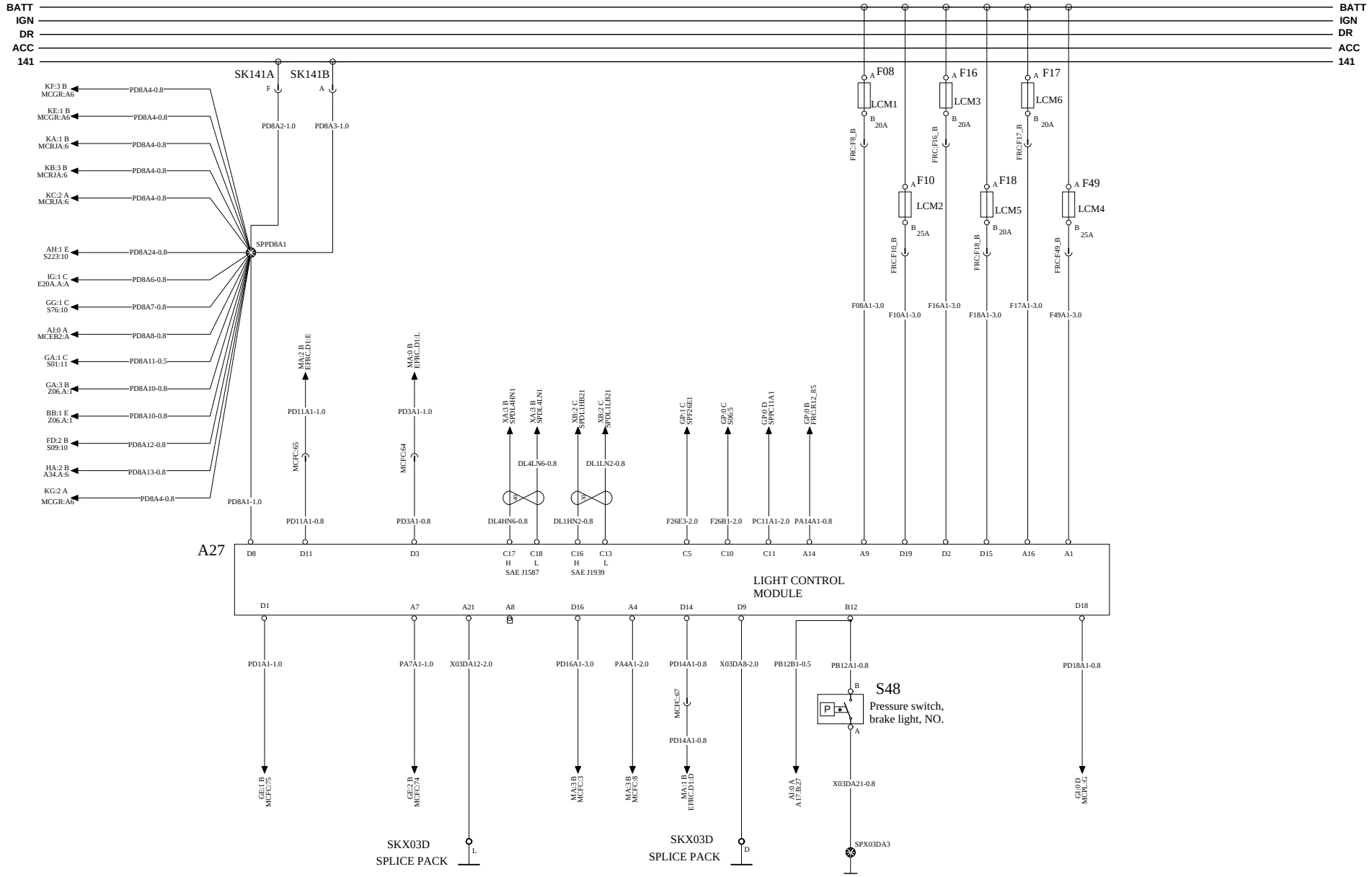

VOLVO Group Trucks Technology	Document title 12V SCHEMATIC VOLVO	Document No	Issue	Volume	Page
	Document type PRODUCT SCHEMATIC	21849527	08	1 (2)	57 (108)

MARKER LAMPS

WIRING DIAGRAM: GC

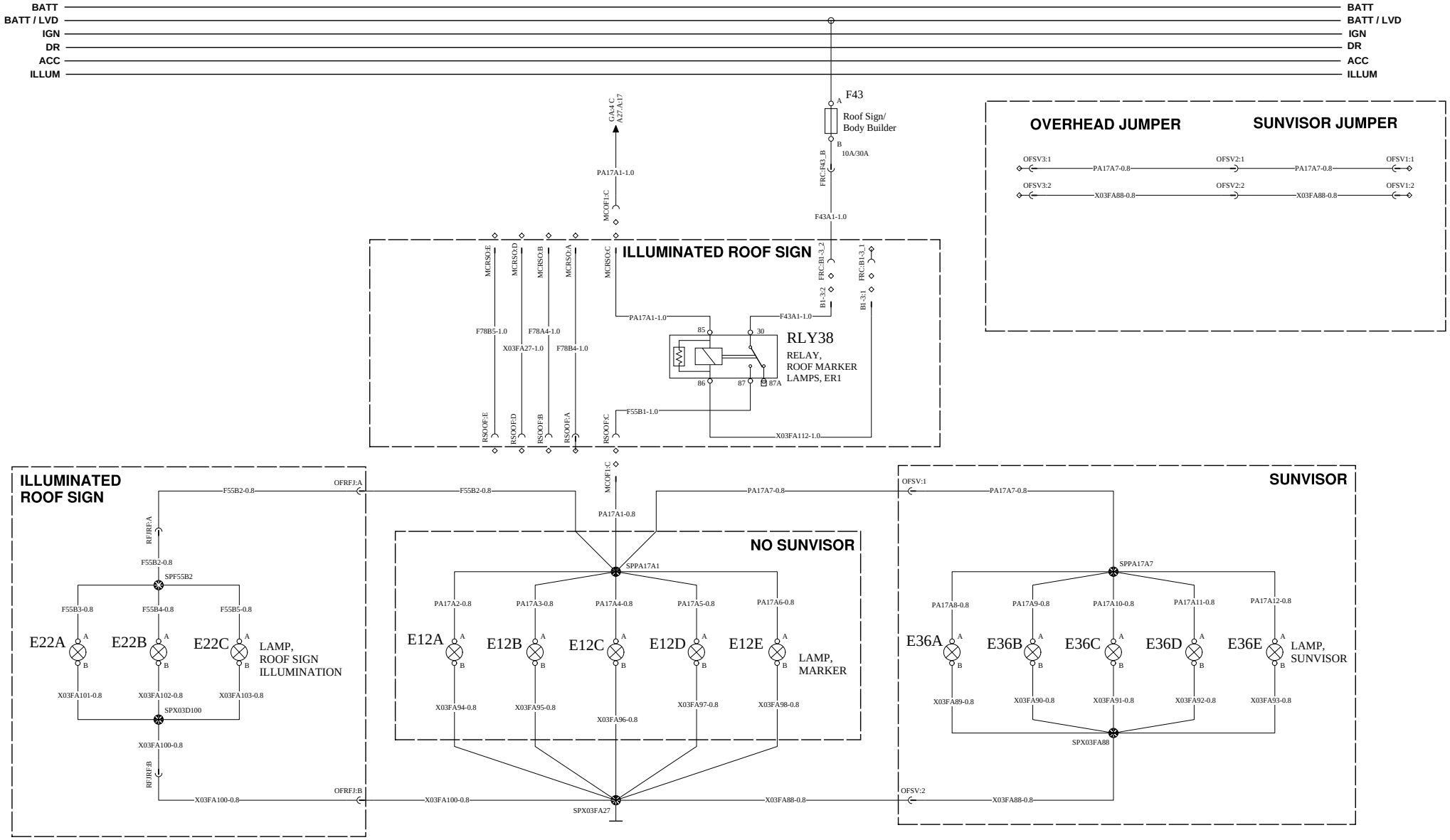

VOLVO Group Trucks Technology	Document title 12V SCHEMATIC VOLVO	Document No	Issue	Volume	Page
	Document type PRODUCT SCHEMATIC	21849527	08	1 (2)	58 (108)

DRIVING LIGHTS

WIRING DIAGRAM: GD

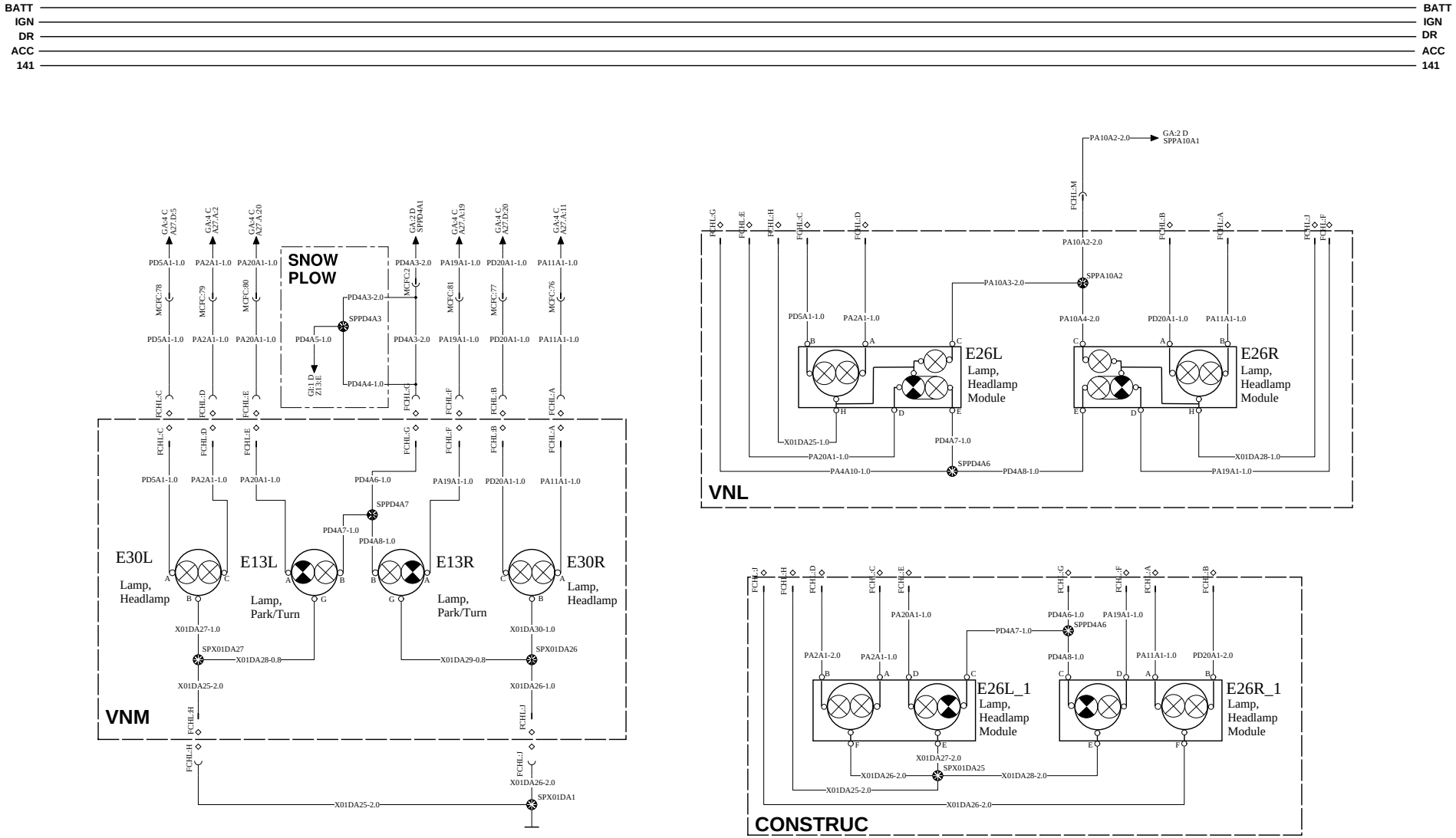

VOLVO Group Trucks Technology	Document title 12V SCHEMATIC VOLVO	Document No	Issue	Volume	Page
	Document type PRODUCT SCHEMATIC	21849527	08	1 (2)	59 (108)

DRIVING/FOG LIGHTS

WIRING DIAGRAM: GE

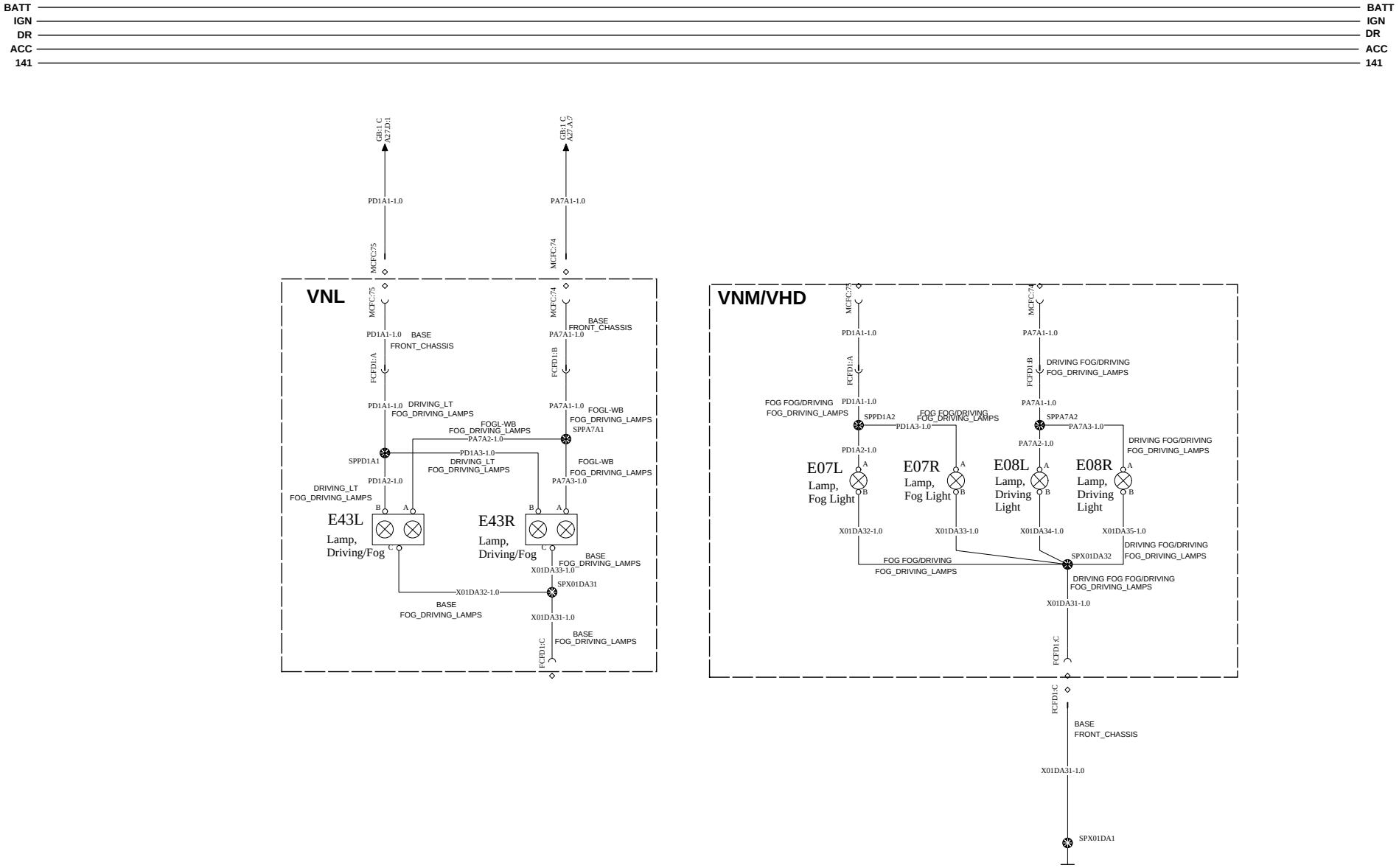

VOLVO Group Trucks Technology	Document title 12V SCHEMATIC VOLVO	Document No	Issue	Volume	Page
	Document type PRODUCT SCHEMATIC	21849527	08	1 (2)	60 (108)

TAIL LAMPS W/ALARM

WIRING DIAGRAM: GF

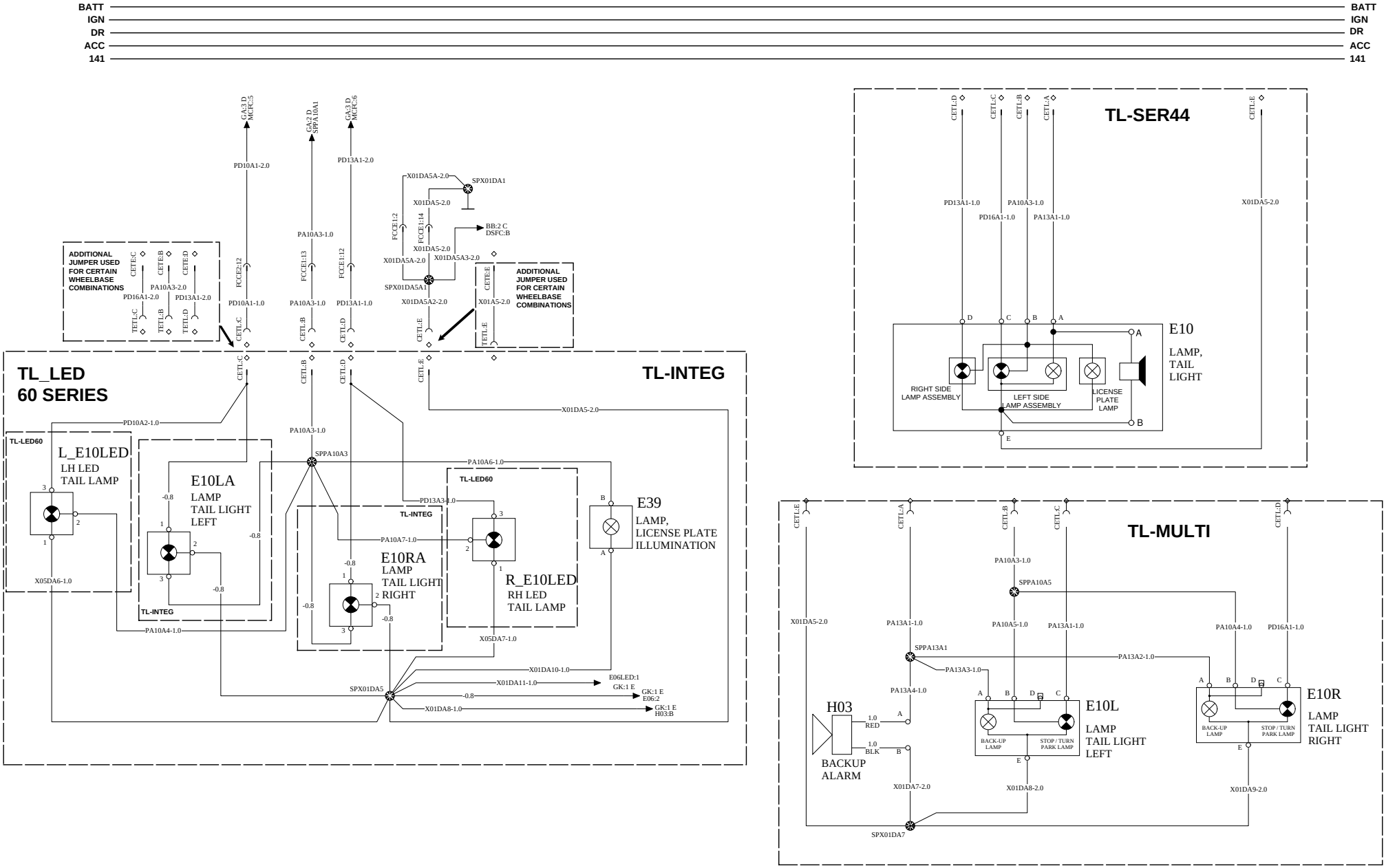

VOLVO Group Trucks Technology	Document title 12V SCHEMATIC VOLVO	Document No	Issue	Volume	Page
	Document type PRODUCT SCHEMATIC	21849527	08	1 (2)	61 (108)

BACK OF CAB LAMPS L1

WIRING DIAGRAM: GG

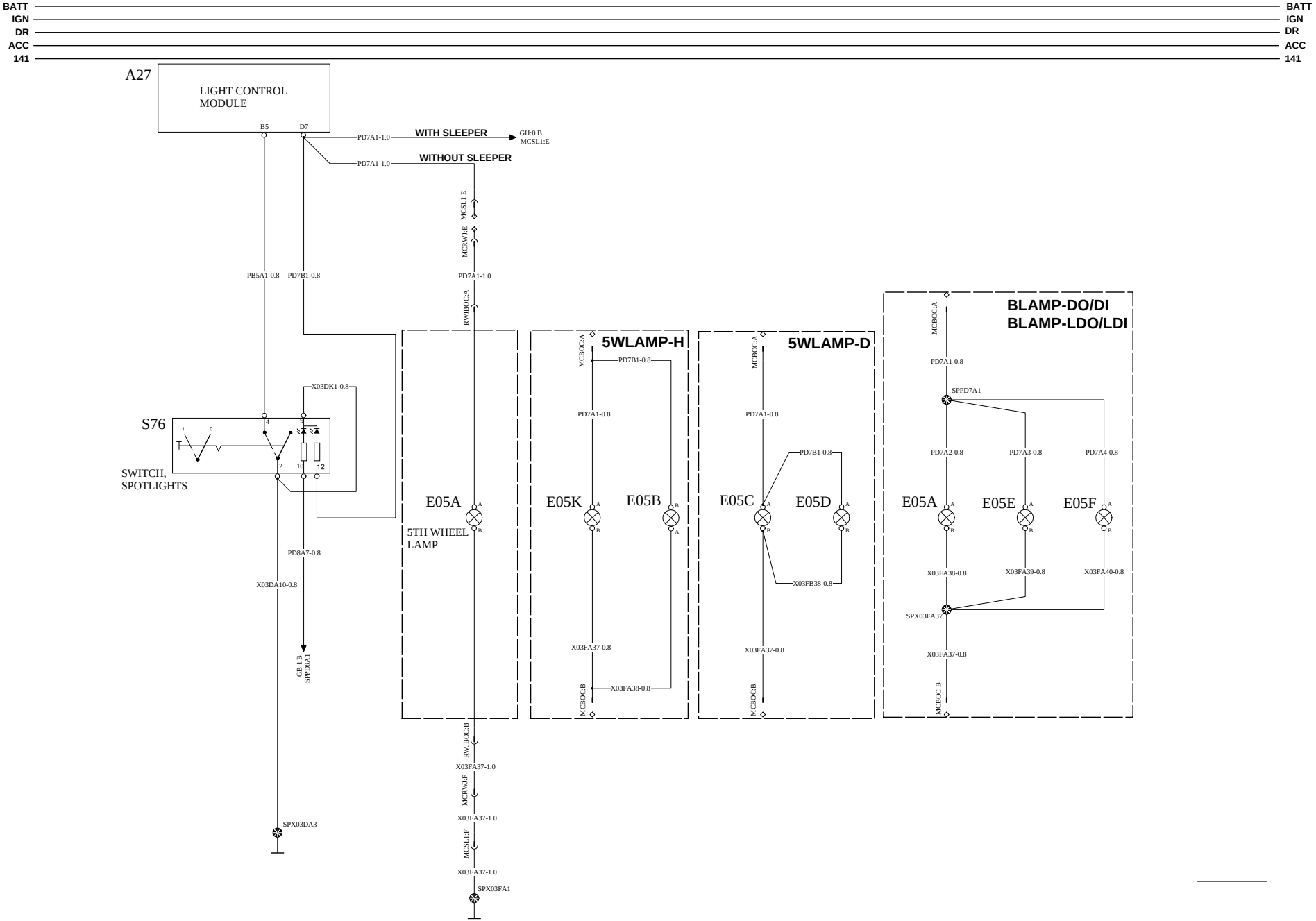

VOLVO Group Trucks Technology	Document title 12V SCHEMATIC VOLVO	Document No	Issue	Volume	Page
	Document type PRODUCT SCHEMATIC	21849527	08	1 (2)	62 (108)

CABKOF CAB LAMPS L3 - L5

WIRING DIAGRAM: GH

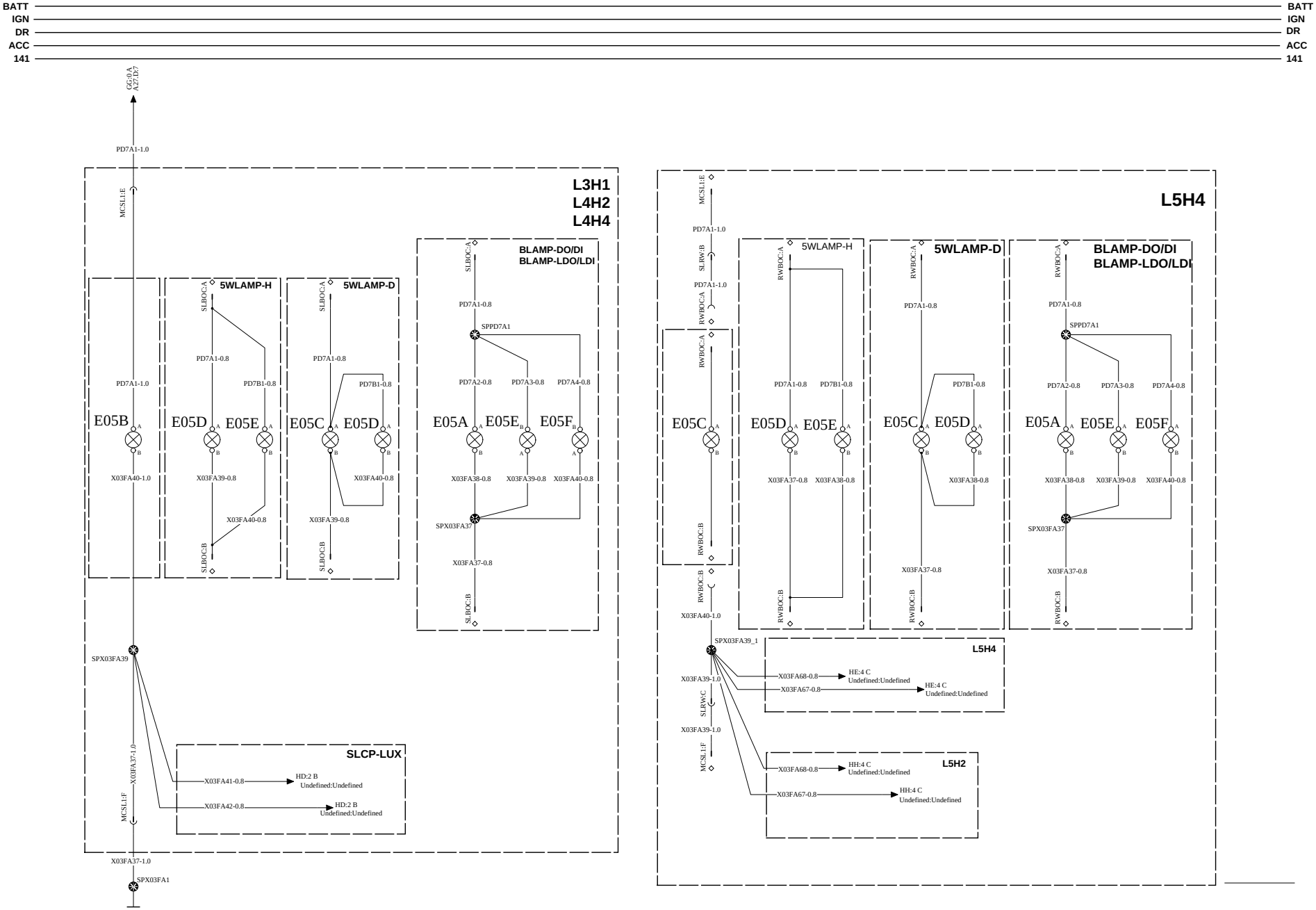

VOLVO Group Trucks Technology	Document title 12V SCHEMATIC VOLVO	Document No	Issue	Volume	Page
	Document type PRODUCT SCHEMATIC	21849527	08	1 (2)	63 (108)

SNOW PLOW AND BEACON LAMPS

WIRING DIAGRAM: GI

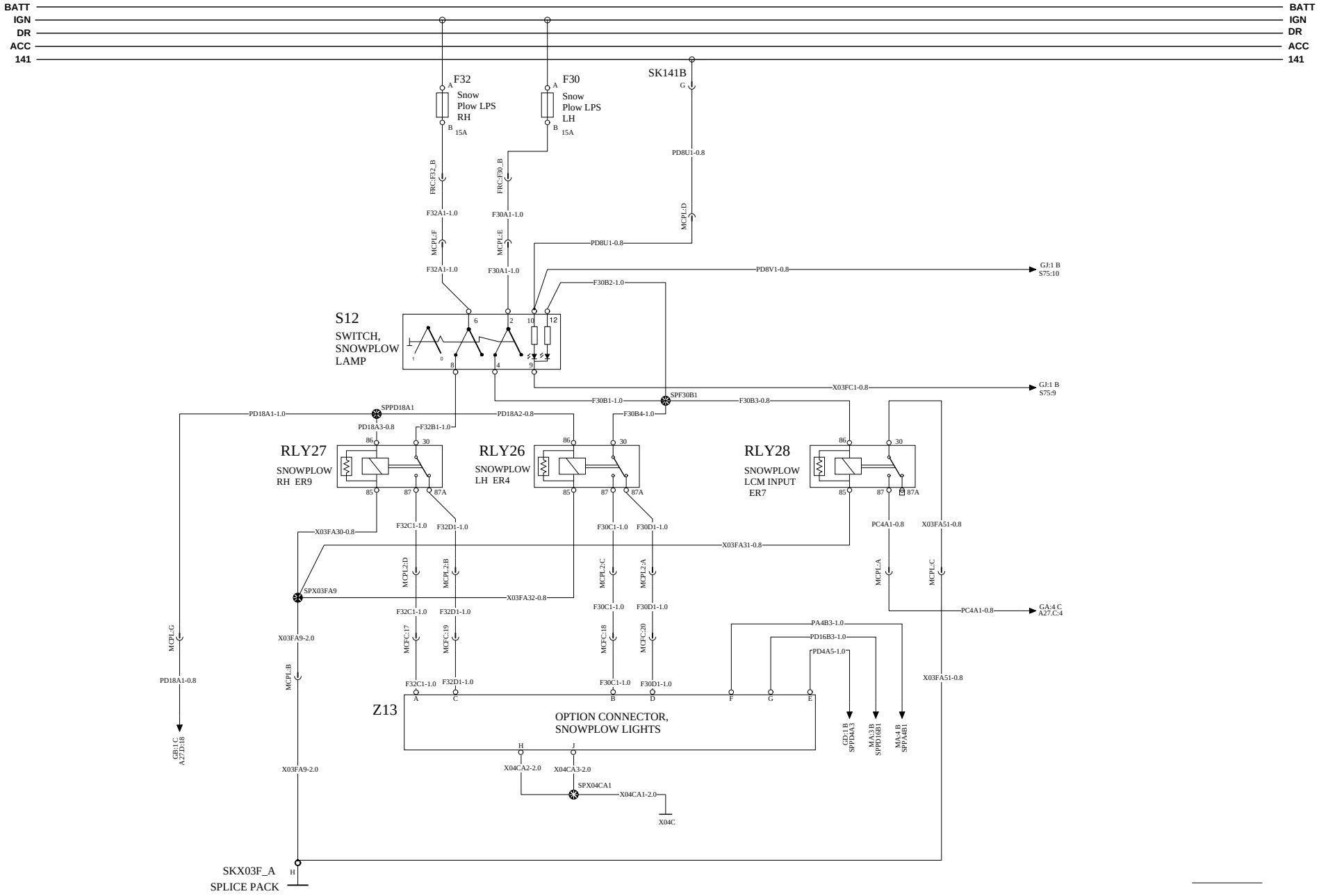

VOLVO Group Trucks Technology	Document title 12V SCHEMATIC VOLVO	Document No	Issue	Volume	Page
	Document type PRODUCT SCHEMATIC	21849527	08	1 (2)	64 (108)

BEACON LAMPS

WIRING DIAGRAM: GJ

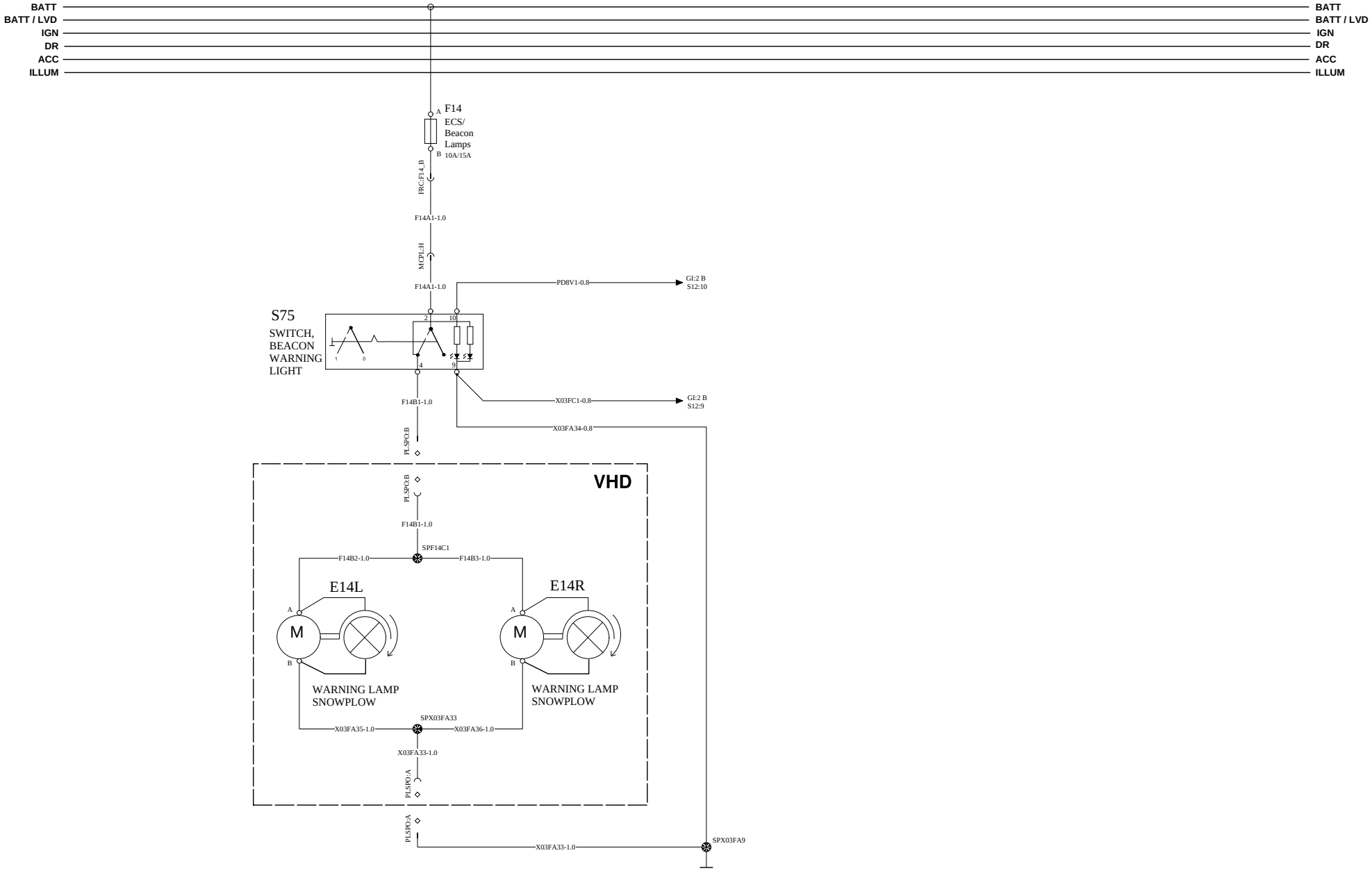

VOLVO Group Trucks Technology	Document title 12V SCHEMATIC VOLVO	Document No	Issue	Volume	Page
	Document type PRODUCT SCHEMATIC	21849527	08	1 (2)	65 (108)

BACKUP LAMPS WITH ALARM

WIRING DIAGRAM: GK

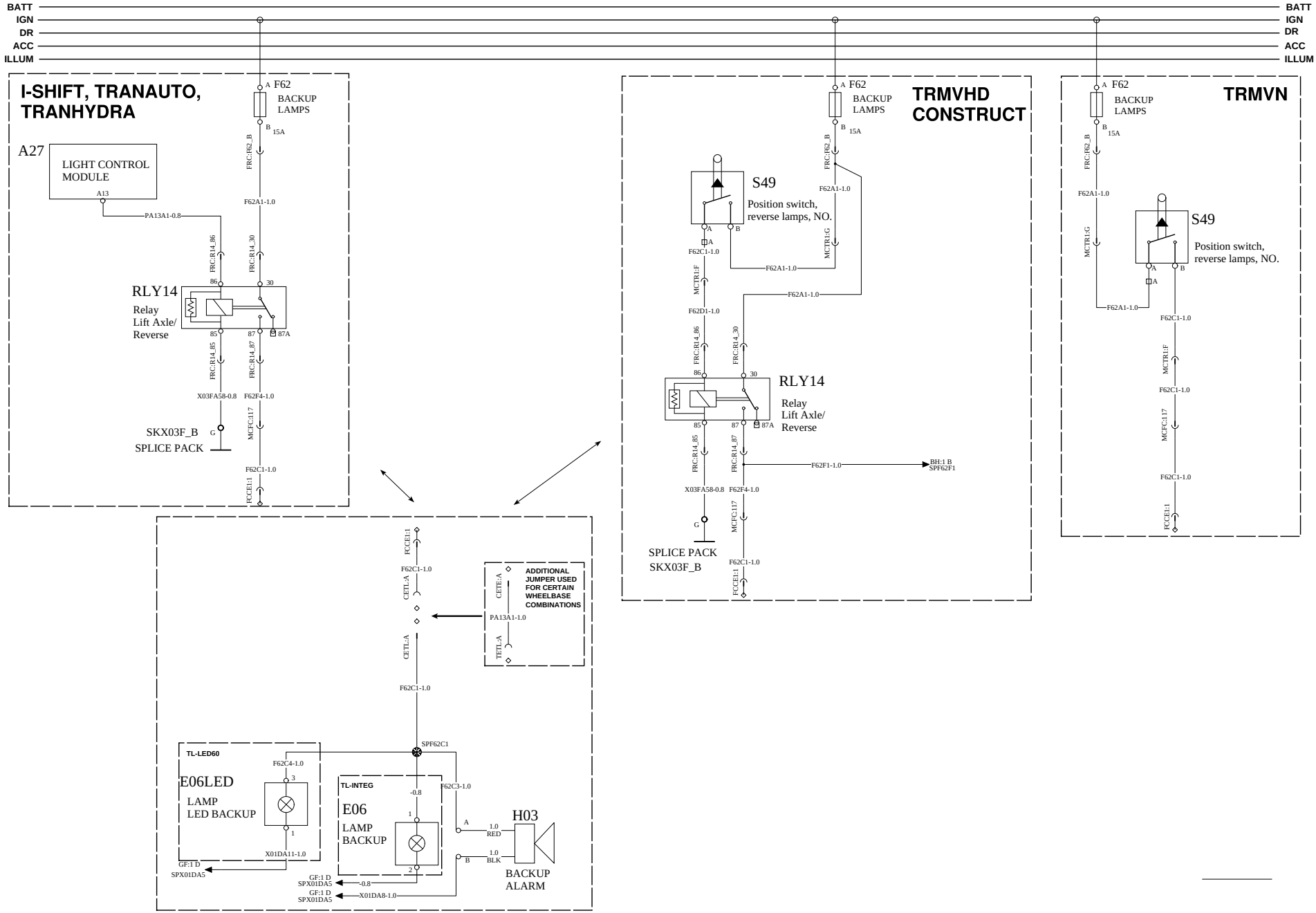

Document title	Document No	Issue	Volume	Page
12V SCHEMATIC VOLVO	21849527	08	1 (2)	66 (108)
Document type: PRODUCT SCHEMATIC				

VOLVO Group Trucks Technology

WINGSHIELD WASHER

WIRING DIAGRAM: GP

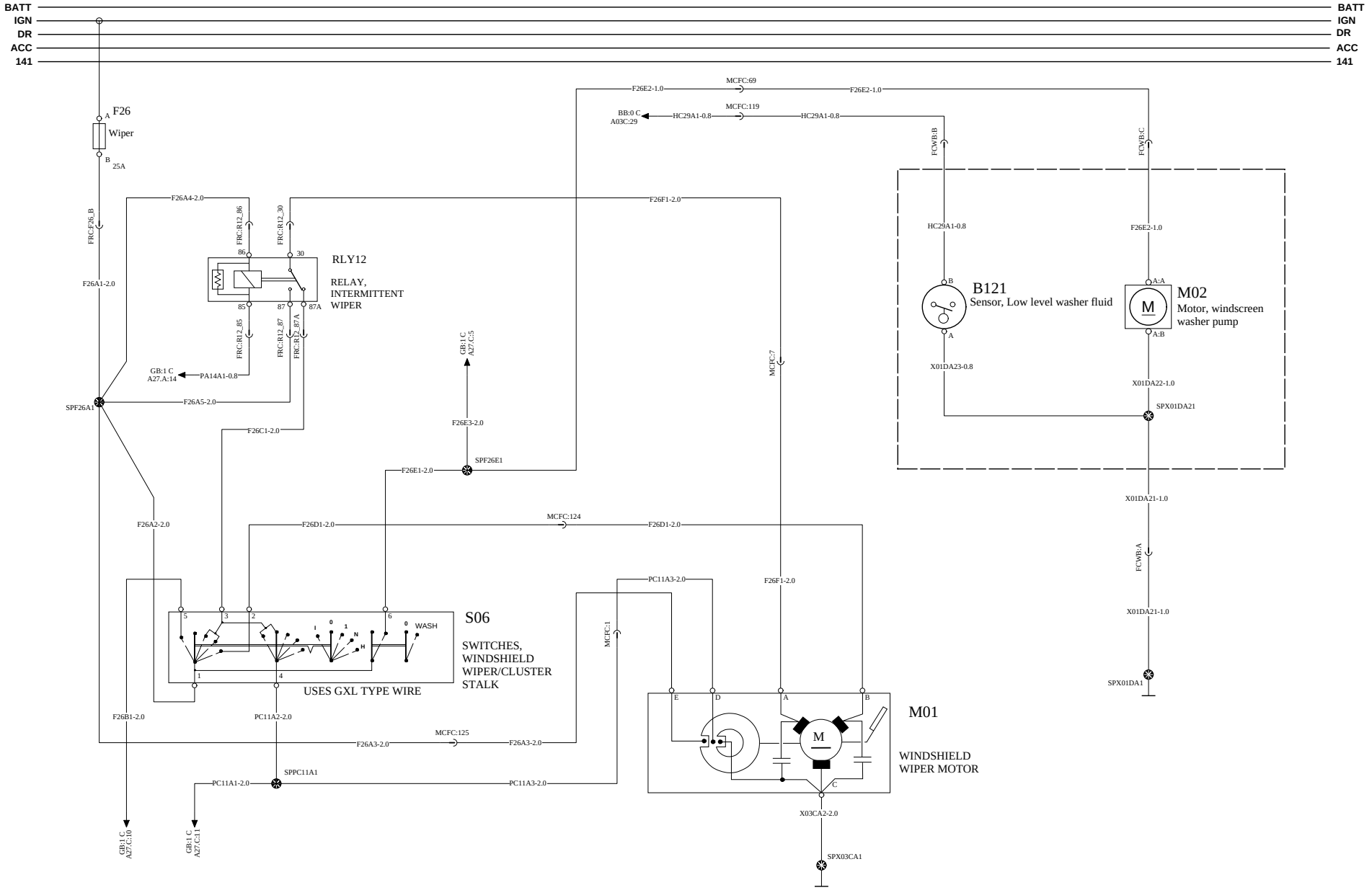

VOLVO Group Trucks Technology	Document title 12V SCHEMATIC VOLVO Document type PRODUCT SCHEMATIC	Document No 21849527	Issue 08	Volume 1 (2)	Page 67 (108)

HORN

WIRING DIAGRAM: GQ

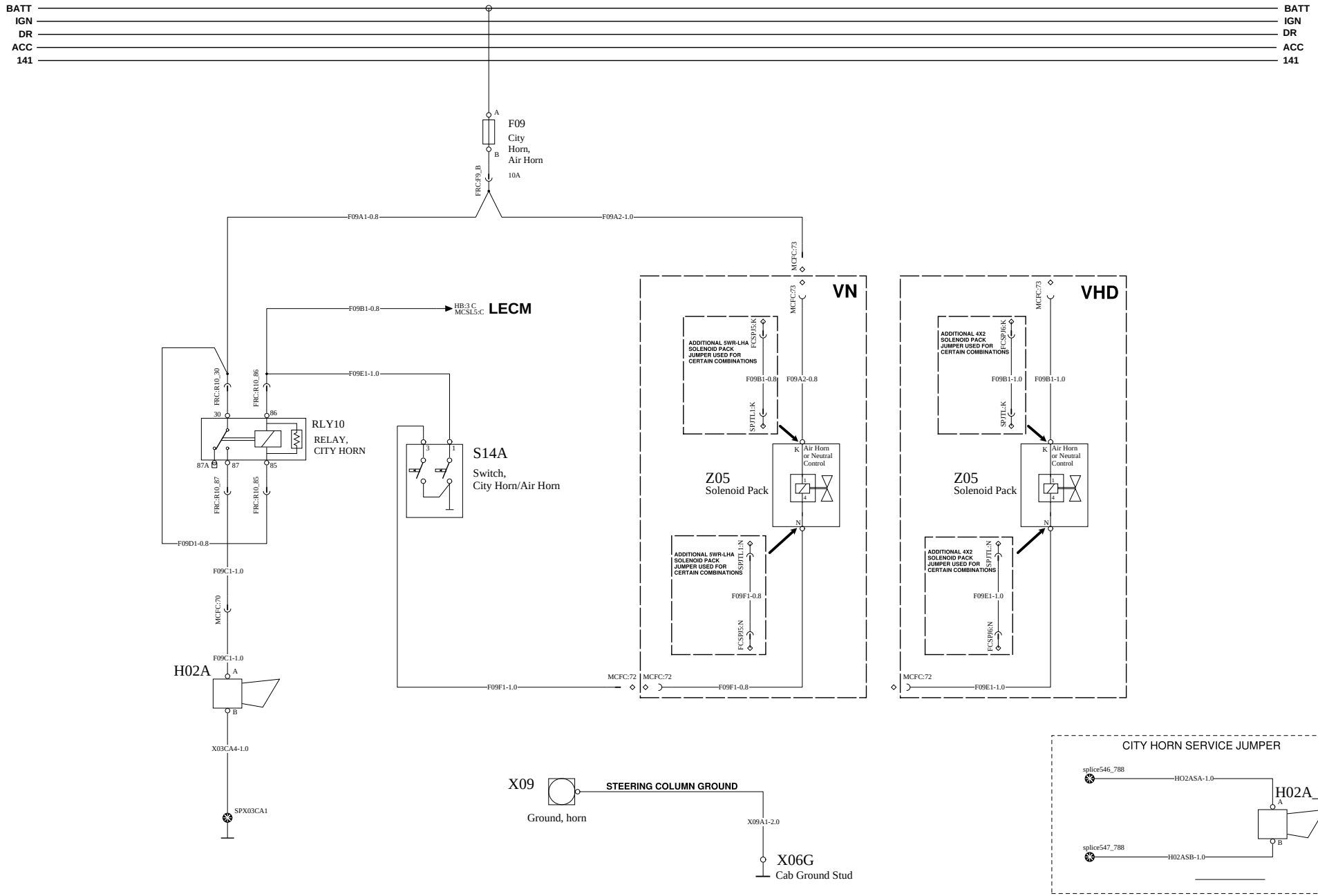

VOLVO Group Trucks Technology	Document title 12V SCHEMATIC VOLVO	Document No	Issue	Volume	Page
	Document type PRODUCT SCHEMATIC	21849527	08	1 (2)	68 (108)

CLIMATE CONTROL

WIRING DIAGRAM: HA

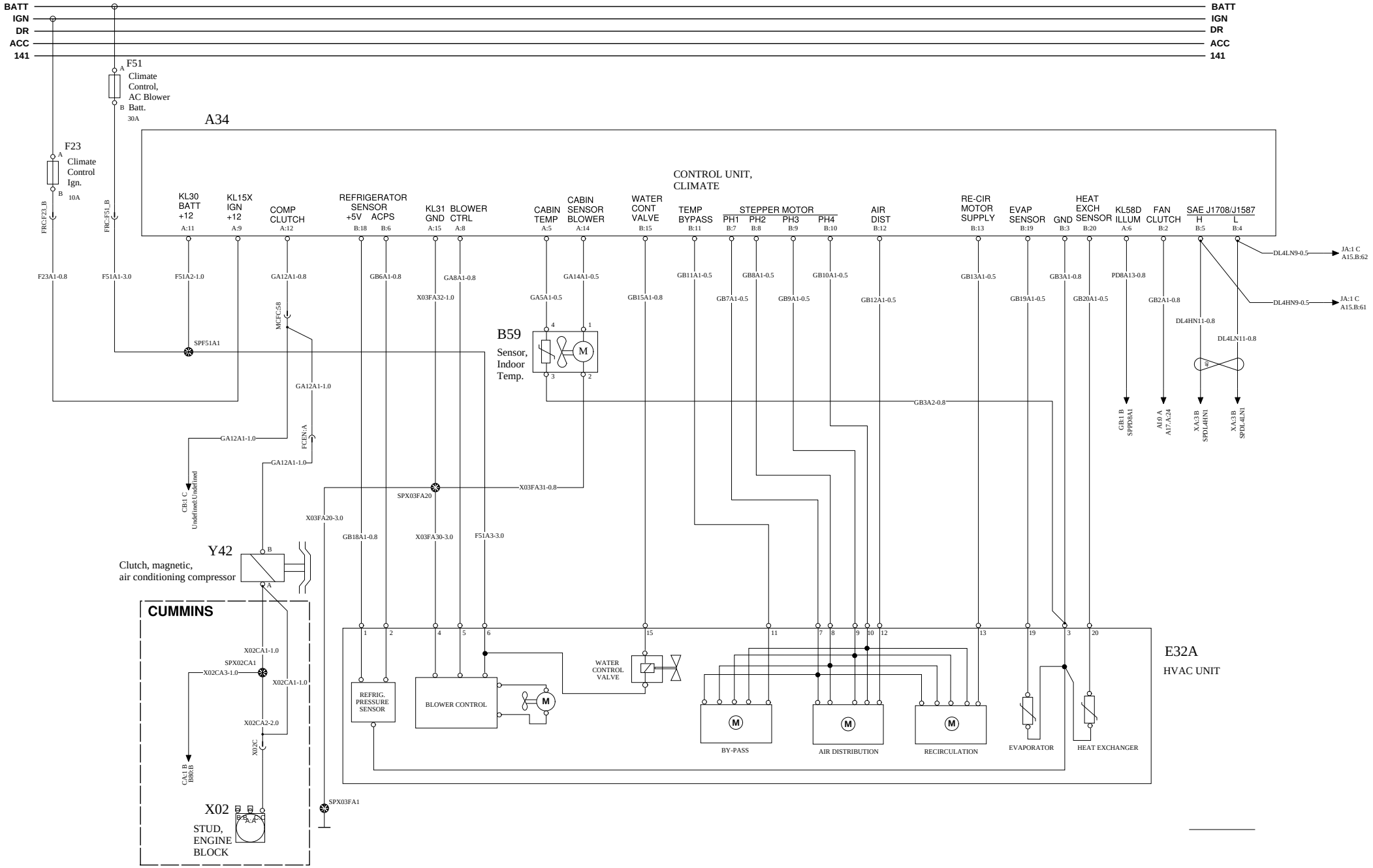

VOLVO Group Trucks Technology	Document title 12V SCHEMATIC VOLVO	Document No	Issue	Volume	Page
	Document type PRODUCT SCHEMATIC	21849527	08	1 (2)	69 (108)

SLEEPER CLIMATE CONTROL W.LECM

WIRING DIAGRAM: HB

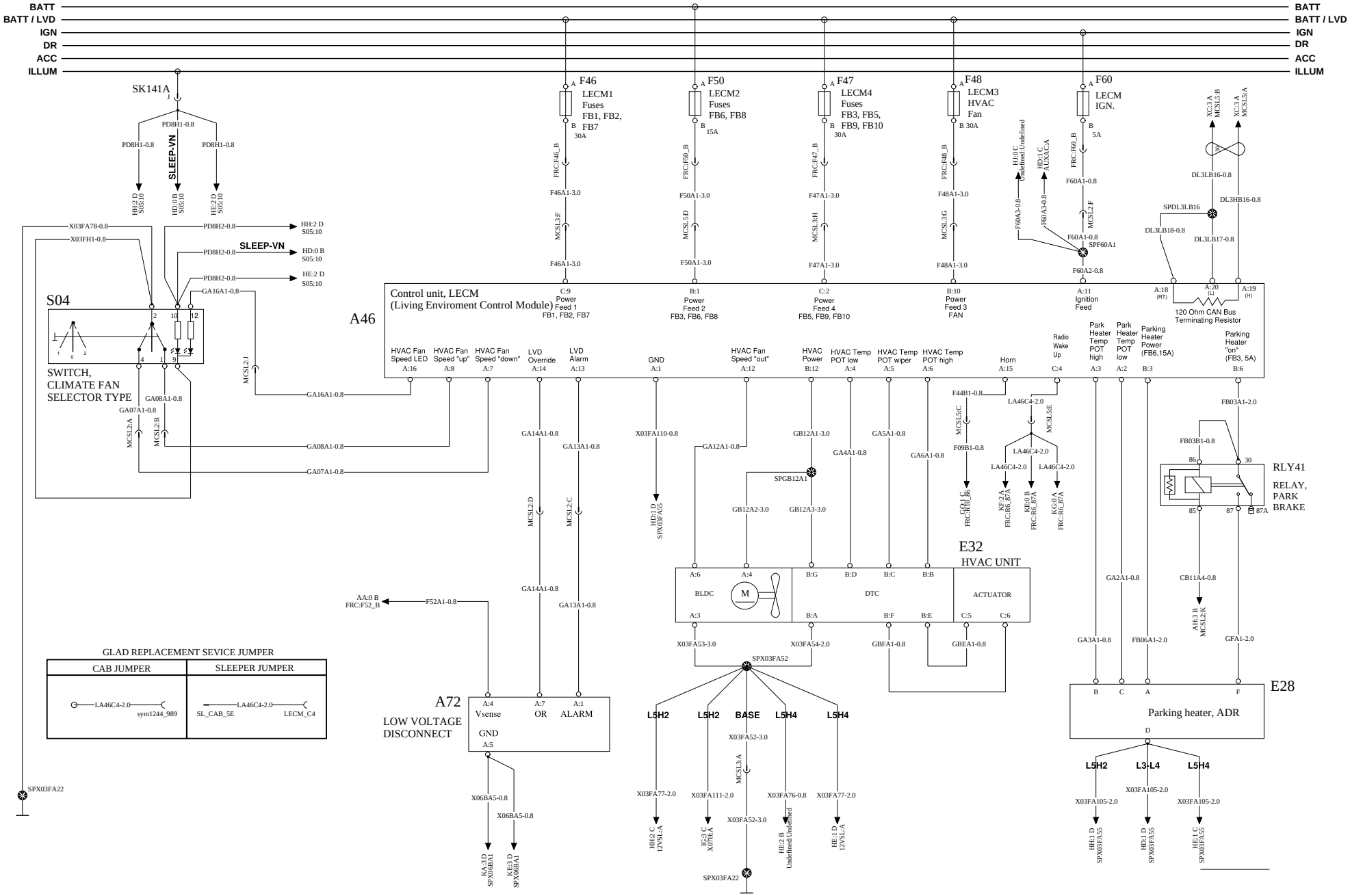

VOLVO Group Trucks Technology	Document title 12V SCHEMATIC VOLVO Document type PRODUCT SCHEMATIC	Document No 21849527	Issue 08	Volume 1 (2)	Page 70 (108)

SHORE POWER

WIRING DIAGRAM: HC

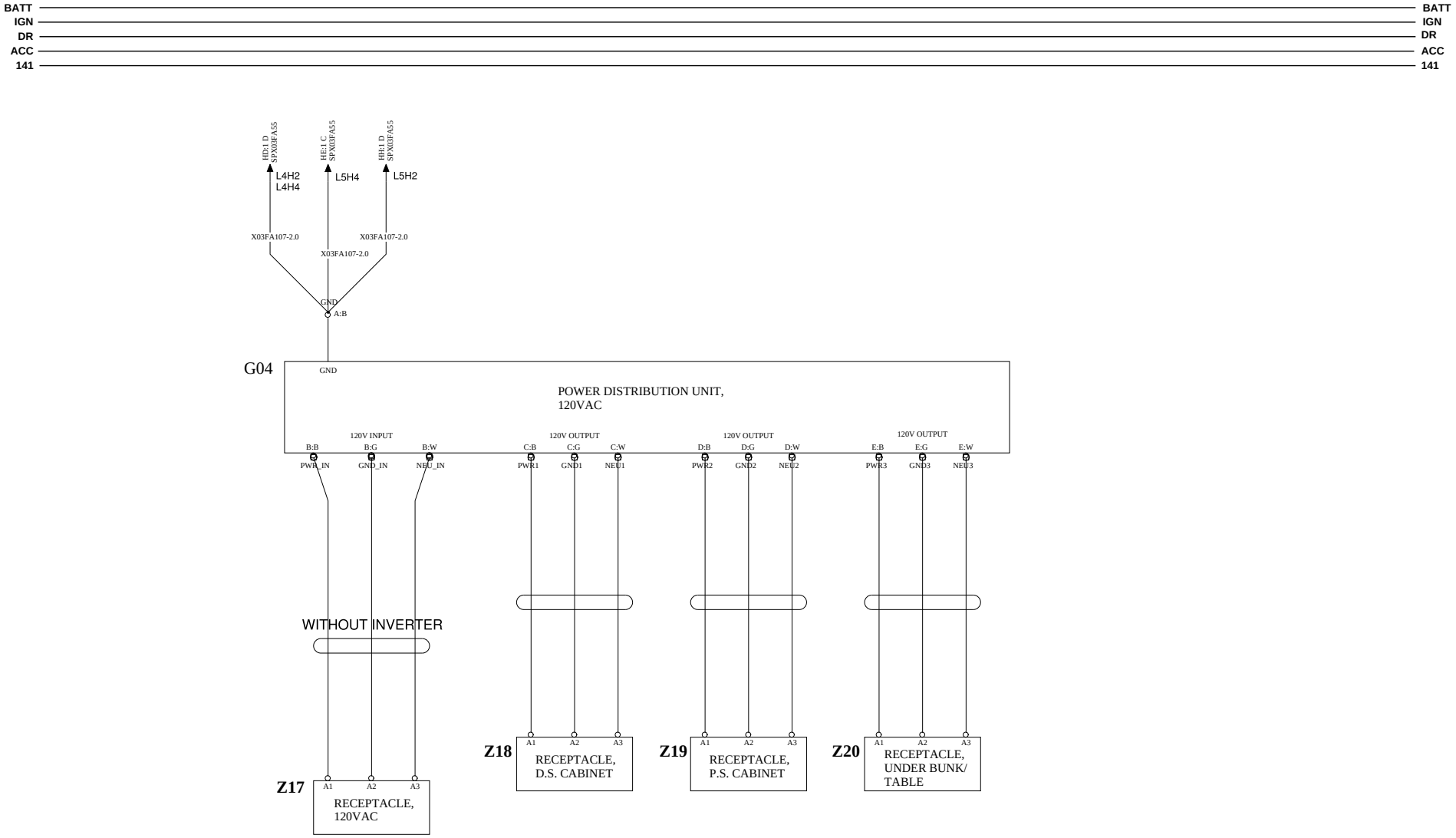

VOLVO Group Trucks Technology	Document title 12V SCHEMATIC VOLVO	Document No	Issue	Volume	Page
	Document type PRODUCT SCHEMATIC	21849527	08	1 (2)	71 (108)

L3 - L4 SLEEPER FUNCTIONS/LIGHTING/REFRIGERATOR

WIRING DIAGRAM: HD

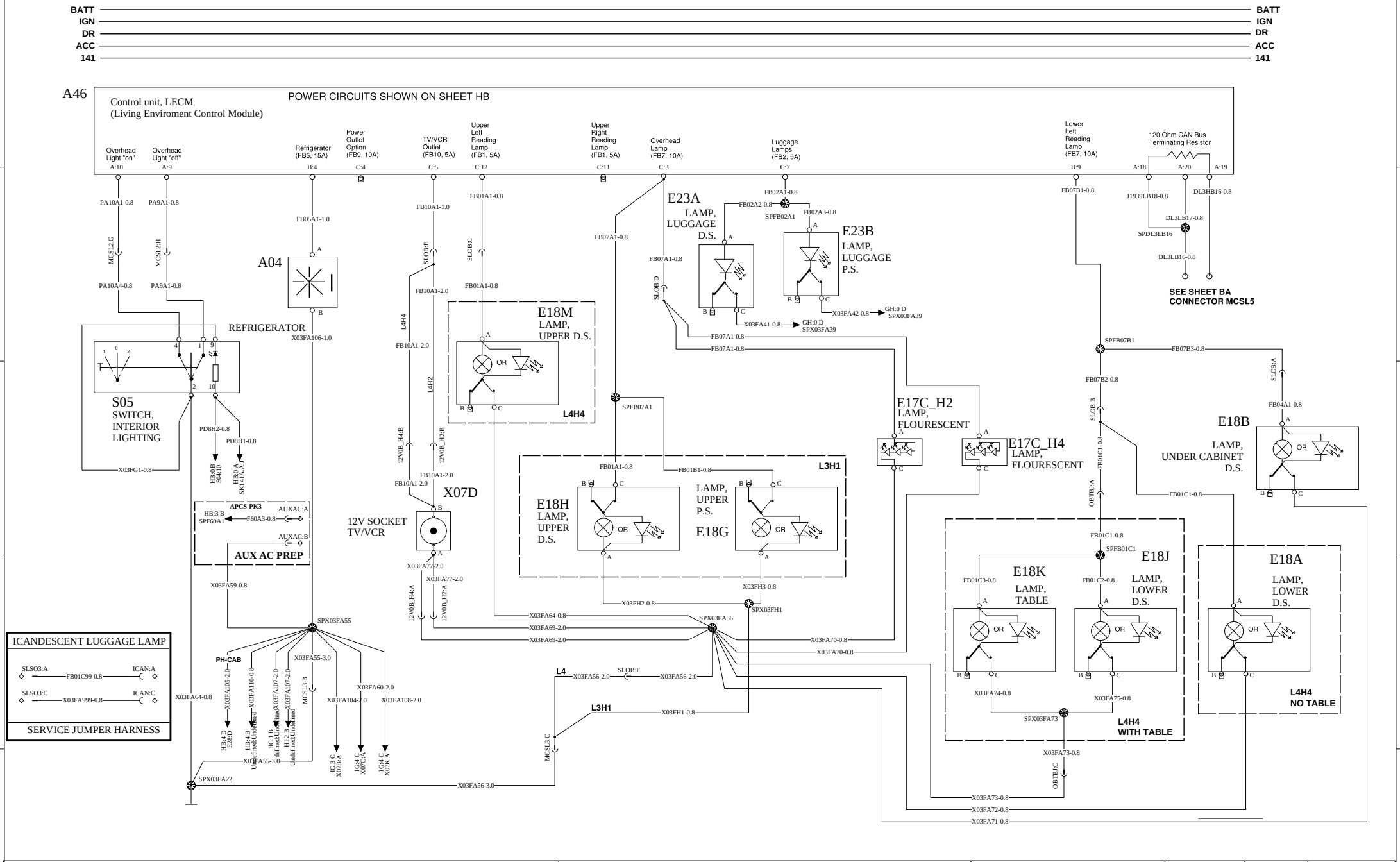

VOLVO Group Trucks Technology	Document title 12V SCHEMATIC VOLVO Document type PRODUCT SCHEMATIC	Document No 21849527	Issue 08	Volume 1 (2)	Page 72 (108)

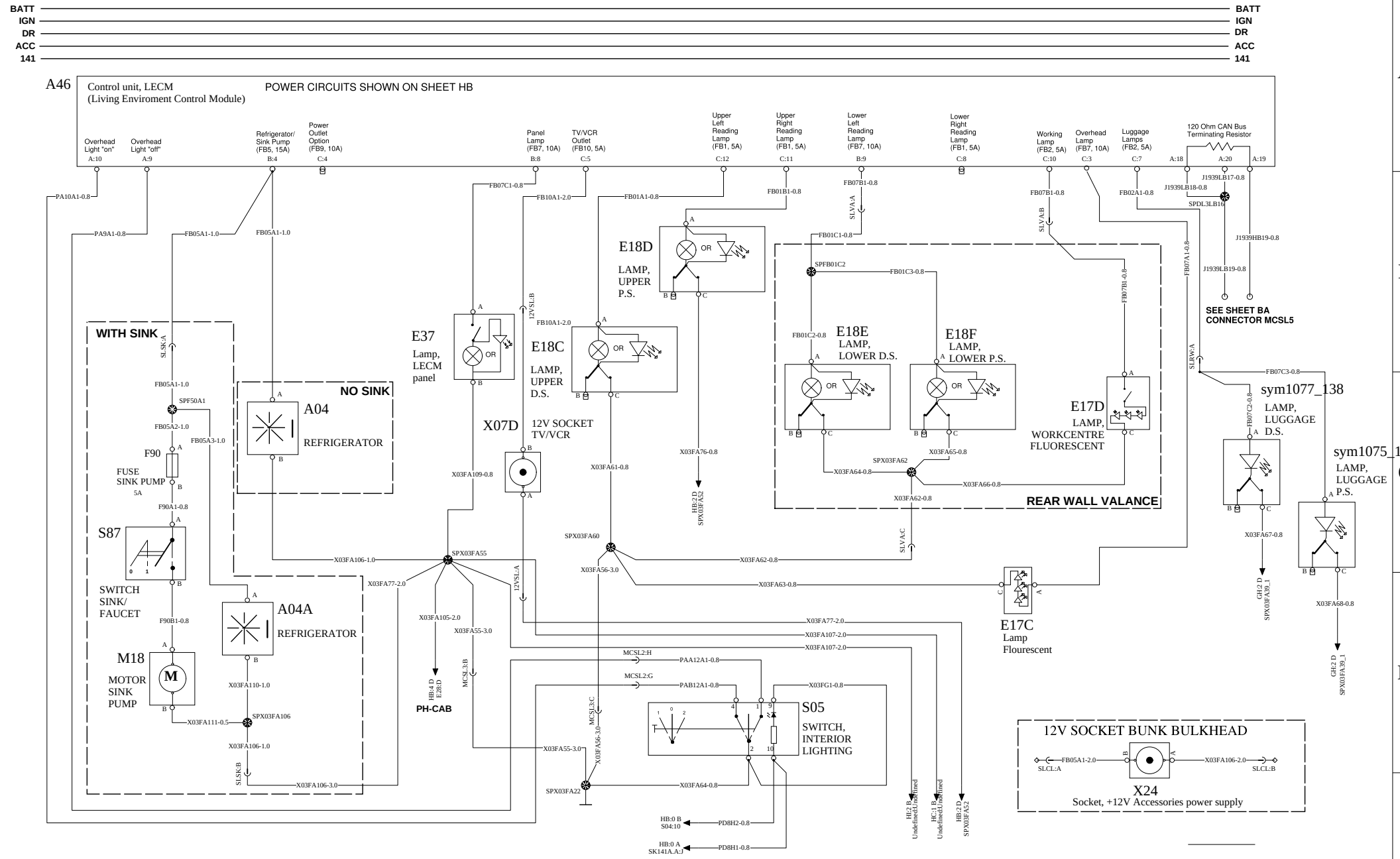

VOLVO Group Trucks Technology	Document title 12V SCHEMATIC VOLVO	Document No	Issue	Volume	Page
	Document type PRODUCT SCHEMATIC	21849527	08	1 (2)	73 (108)

L5H2 SLEEPER FUNCTIONS/LIGHTING/REFRIGERATOR

WIRING DIAGRAM: HH

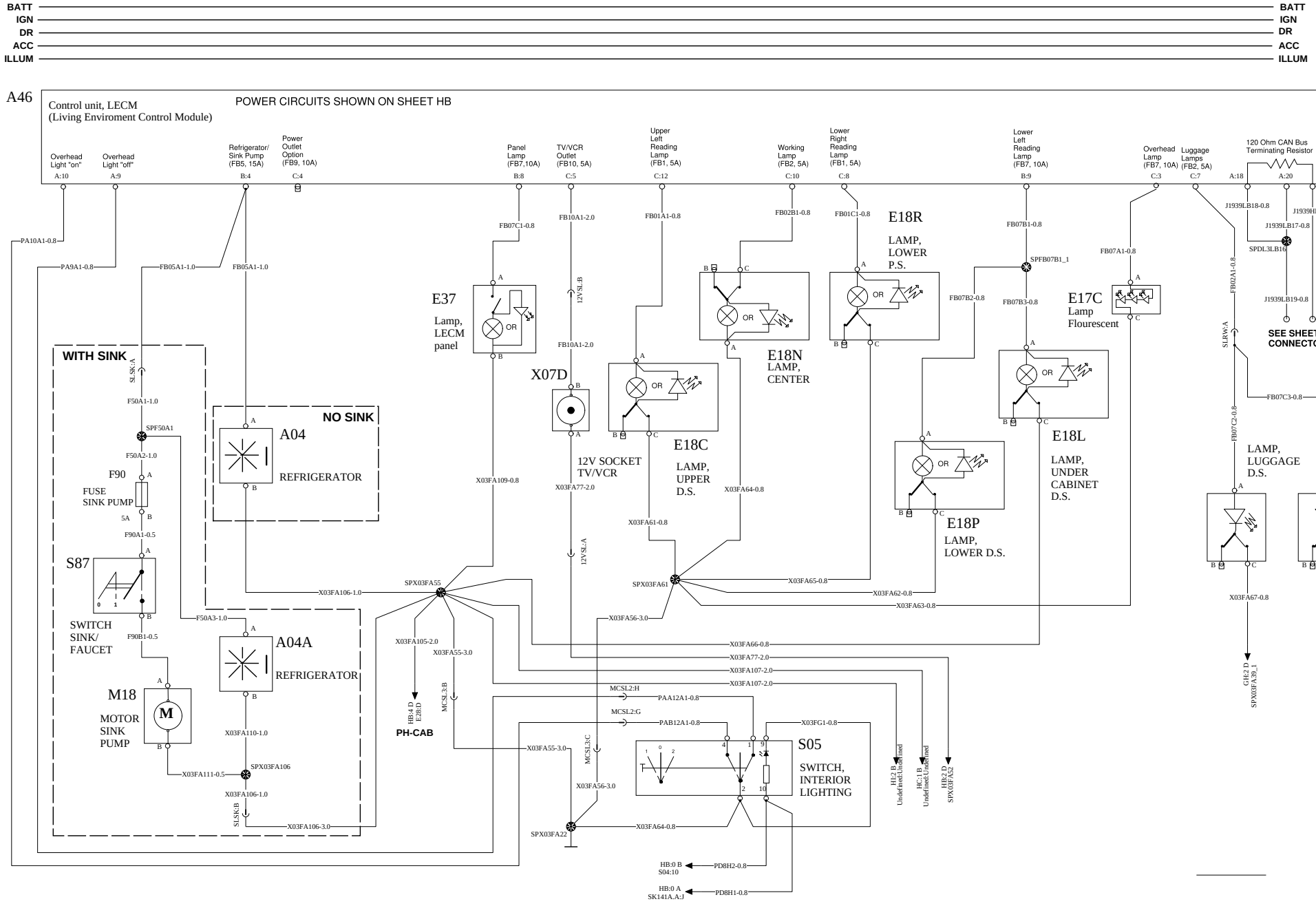

VOLVO Group Trucks Technology	Document title 12V SCHEMATIC VOLVO	Document No	Issue	Volume	Page
	Document type PRODUCT SCHEMATIC	21849527	08	1 (2)	74 (108)

CAB MNT. INVERTER W/SHORE POWER

WIRING DIAGRAM: HI

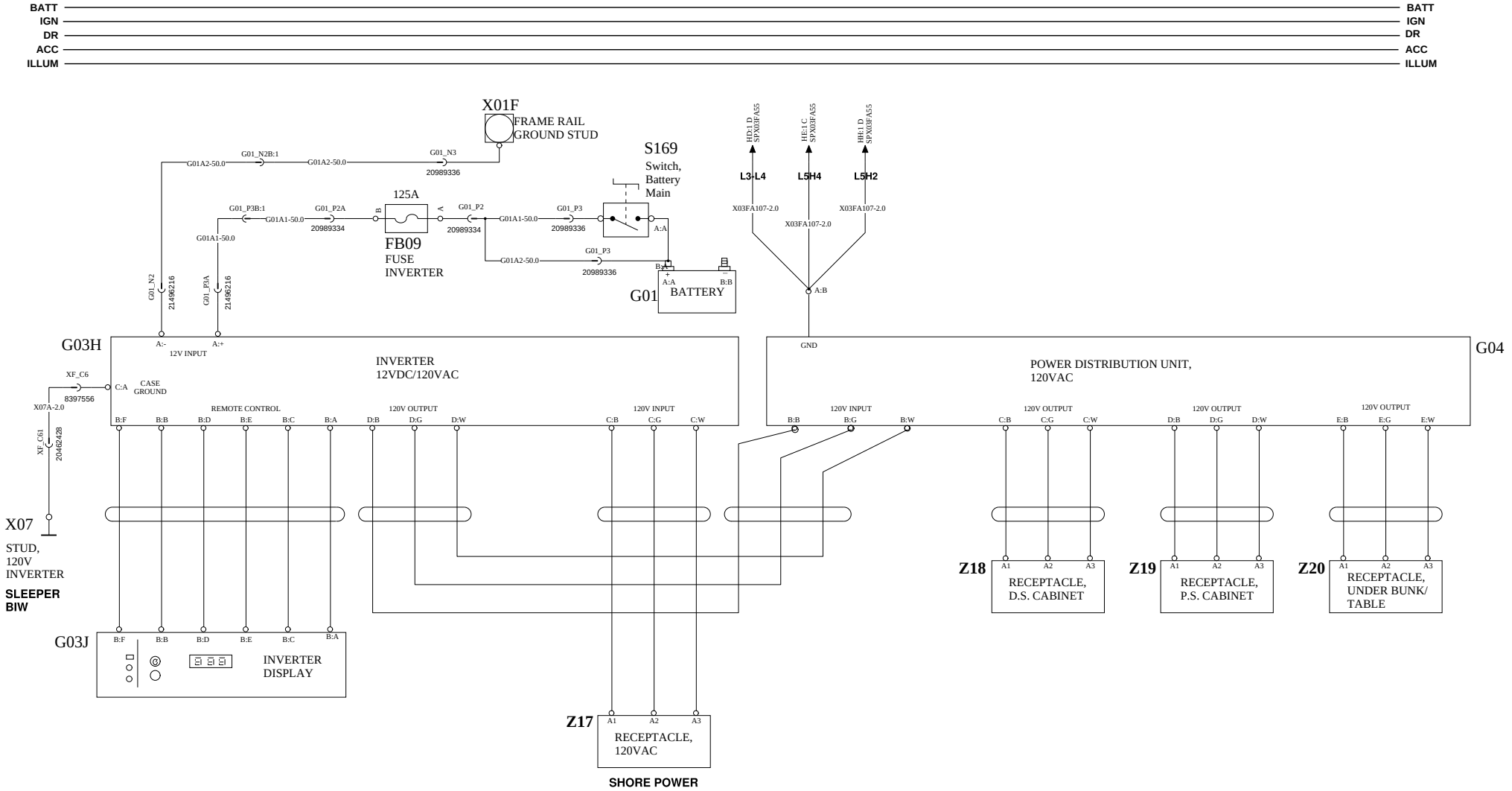

VOLVO Group Trucks Technology	Document title 12V SCHEMATIC VOLVO	Document No	Issue	Volume	Page
	Document type PRODUCT SCHEMATIC	21849527	08	1 (2)	75 (108)

AUXILIARY 12V PARK COOLING SYSTEM 1/2

WIRING DIAGRAM: HJ

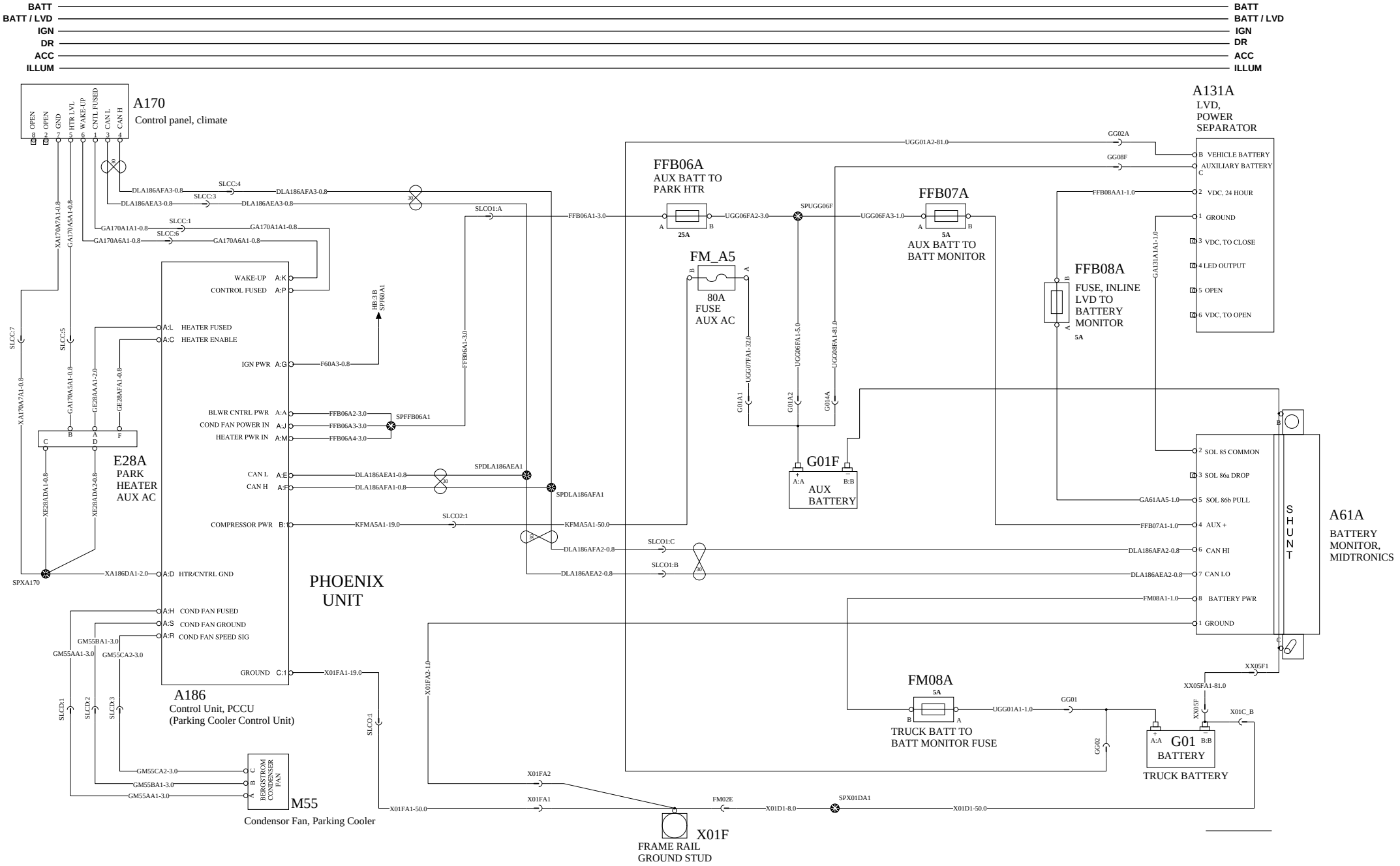

VOLVO Group Trucks Technology	Document title 12V SCHEMATIC VOLVO	Document No	Issue	Volume	Page
	Document type PRODUCT SCHEMATIC	21849527	08	1 (2)	76 (108)

INTERIOR COURTESY LIGHTS

WIRING DIAGRAM: IA

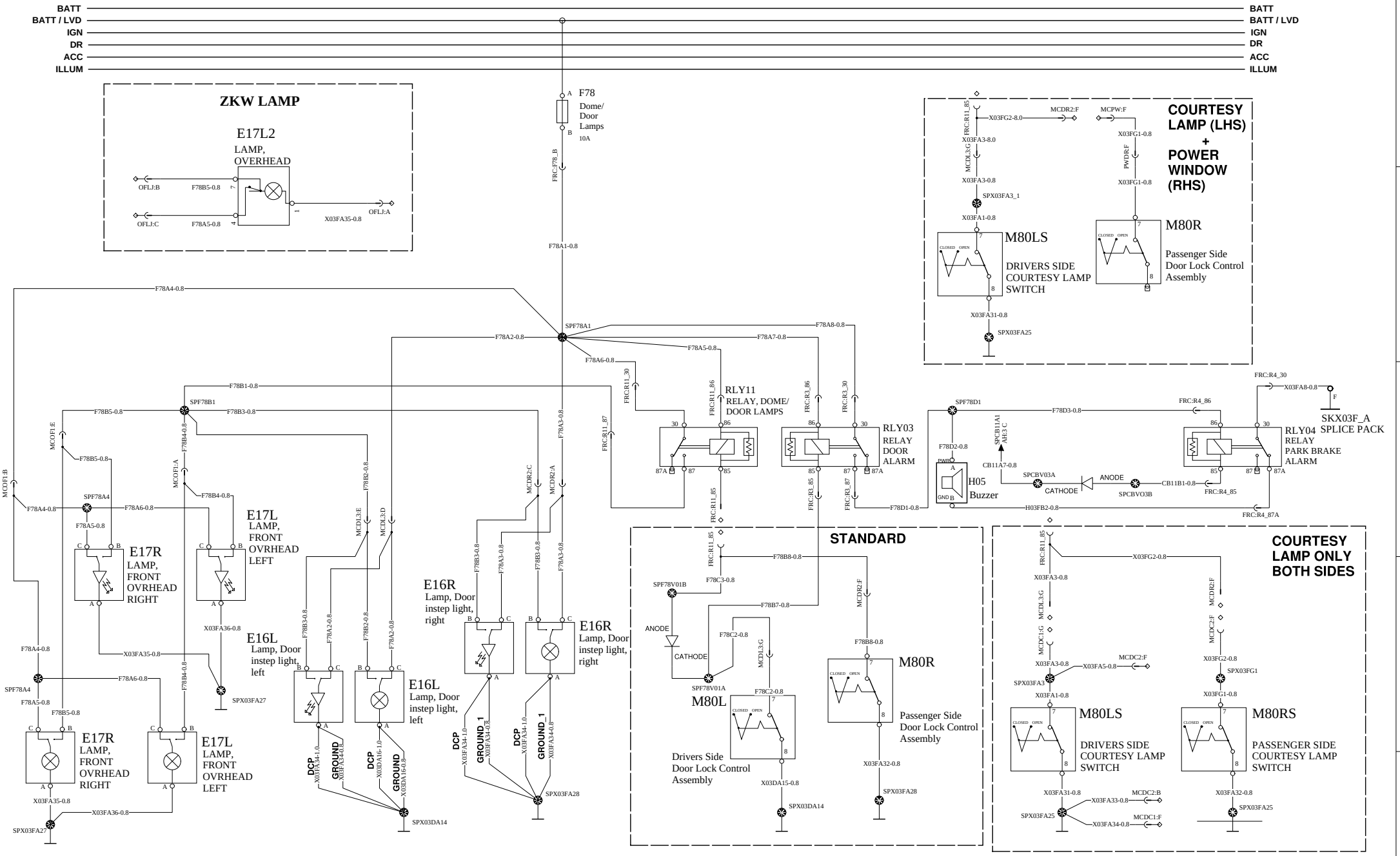

VOLVO Group Trucks Technology	Document title 12V SCHEMATIC VOLVO	Document No	Issue	Volume	Page
	Document type PRODUCT SCHEMATIC	21849527	08	1 (2)	77 (108)

HEATED SEATS/SEATBELT REMINDER/HEATED WINDSHIELD WIRING DIAGRAM: IB

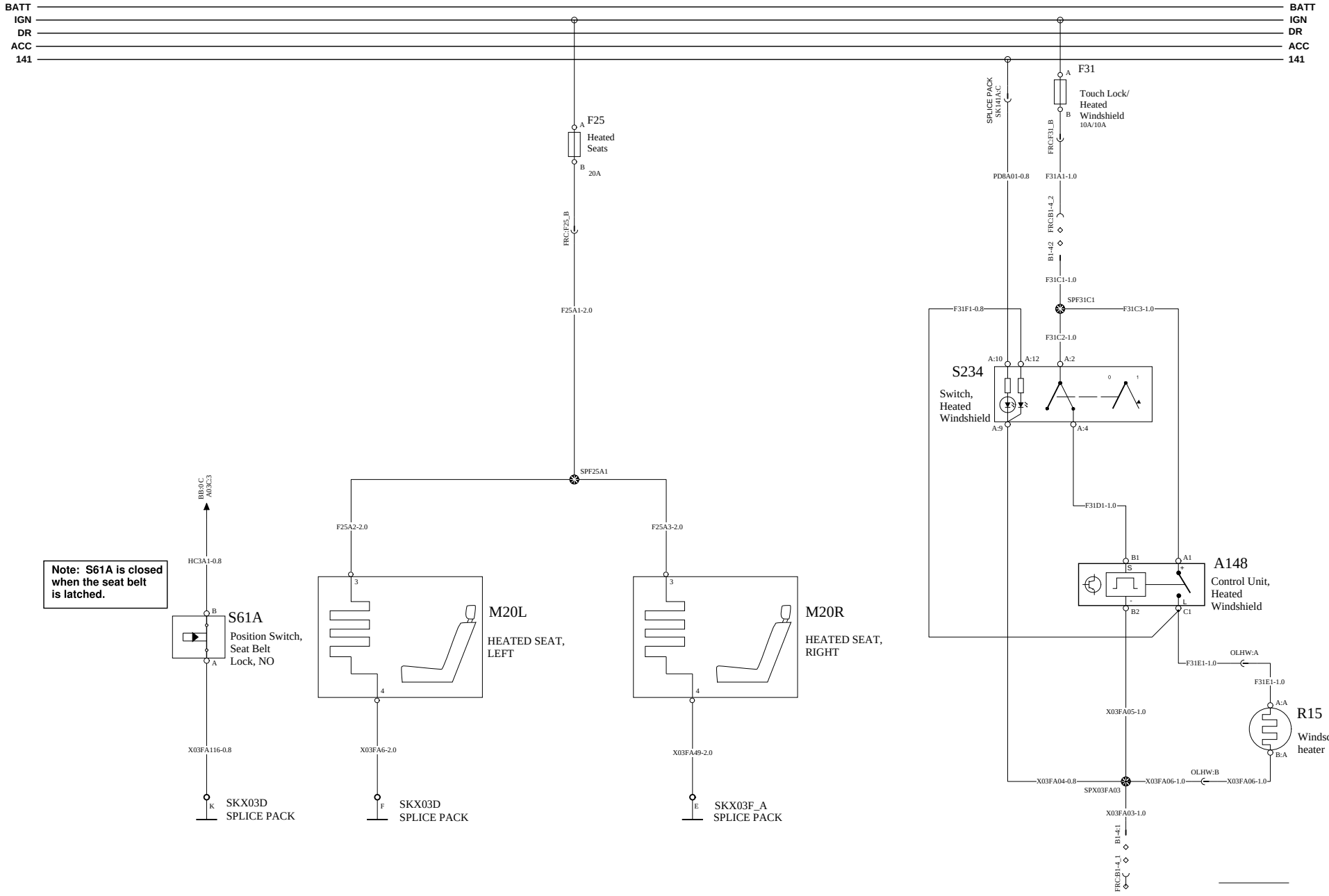

VOLVO Group Trucks Technology	Document title 12V SCHEMATIC VOLVO Document type PRODUCT SCHEMATIC	Document No 21849527	Issue 08	Volume 1 (2)	Page 78 (108)

POWER WINDOWS/MIRRORS W.DCP

WIRING DIAGRAM: IC

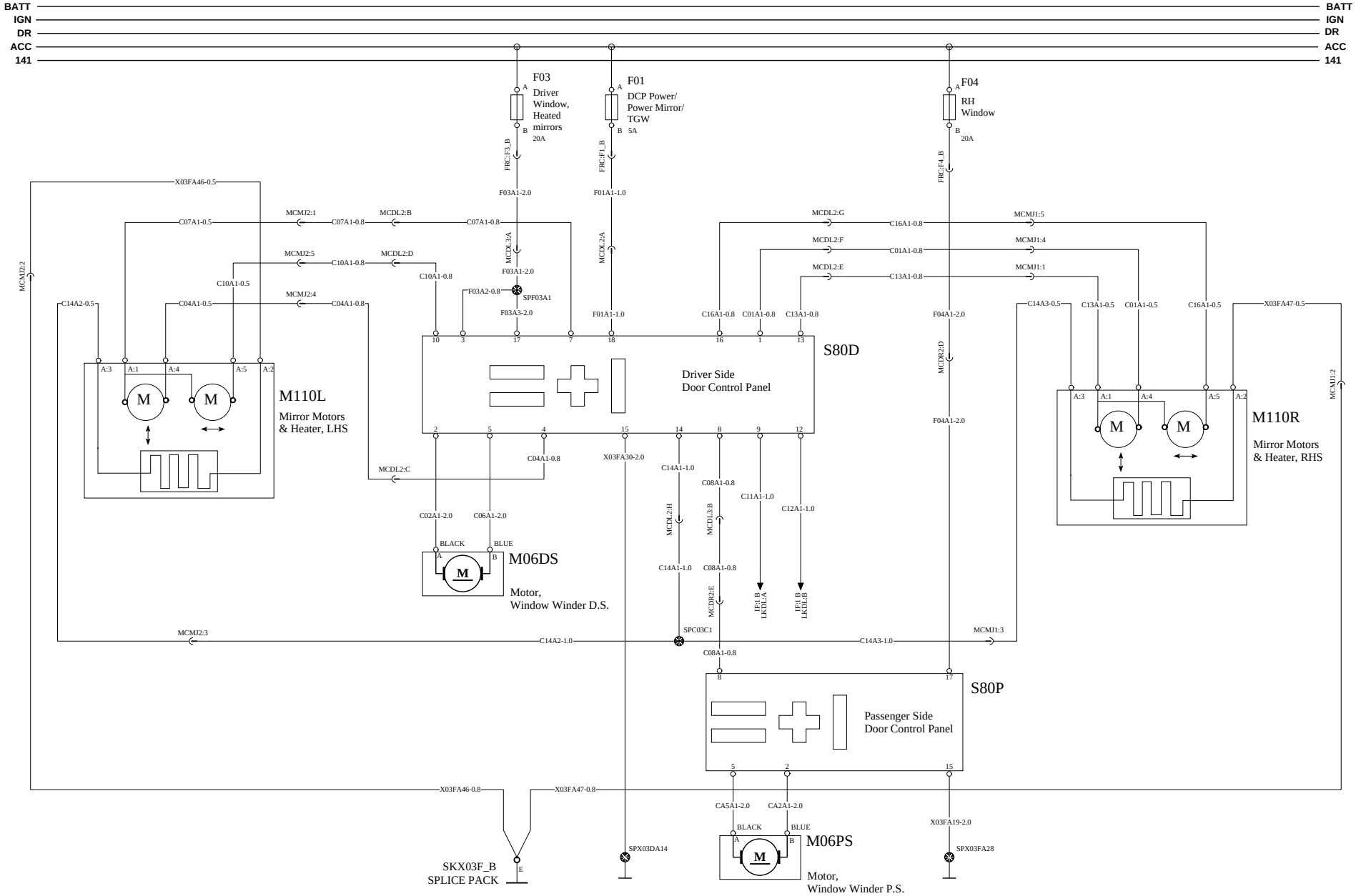

VOLVO Group Trucks Technology	Document title 12V SCHEMATIC VOLVO Document type PRODUCT SCHEMATIC	Document No 21849527	Issue 08	Volume 1 (2)	Page 79 (108)

POWER WINDOWS / MIRRORS WITH TURN SIGNALS

WIRING DIAGRAM: IE

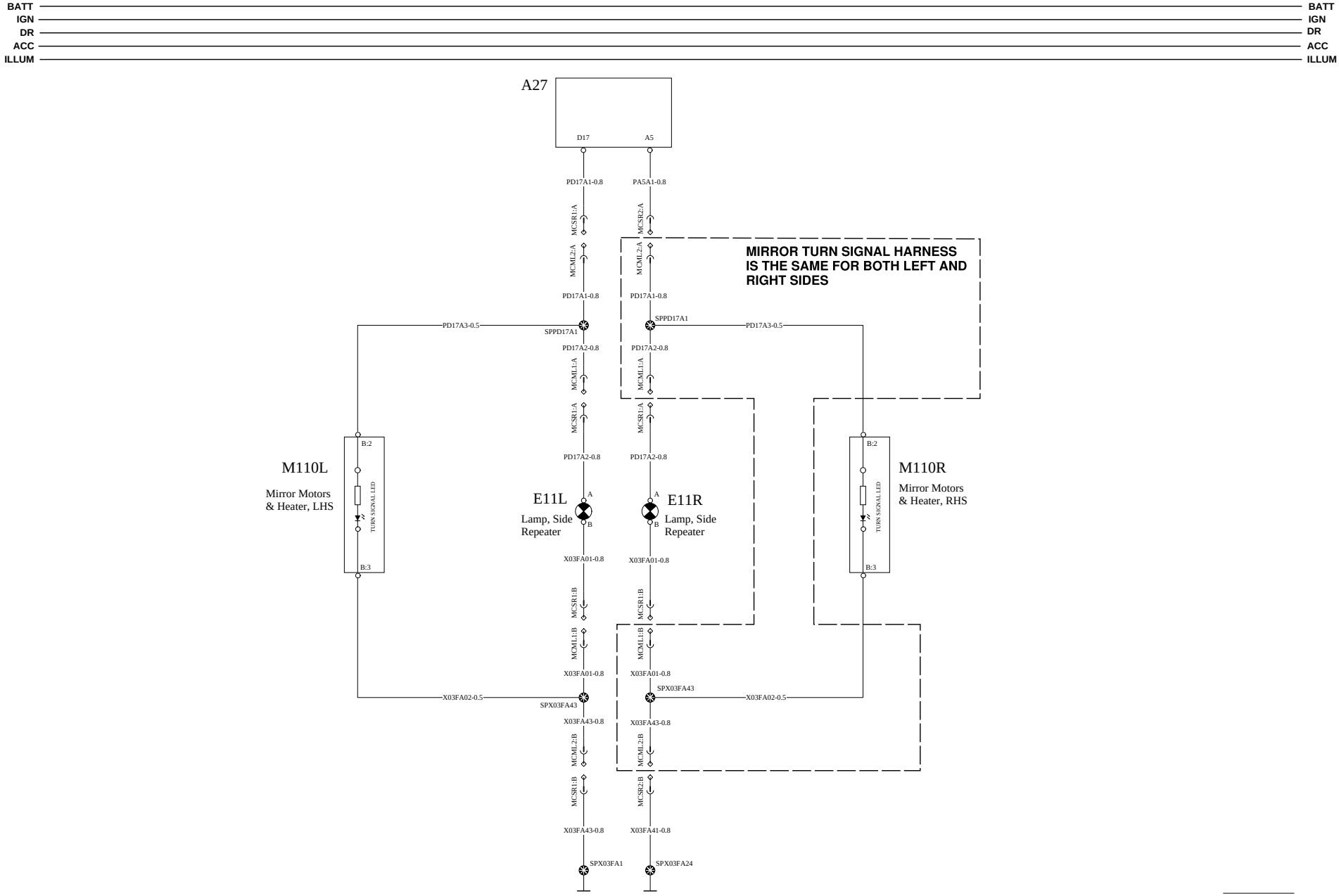

VOLVO Group Trucks Technology	Document title 12V SCHEMATIC VOLVO	Document No	Issue	Volume	Page
	Document type PRODUCT SCHEMATIC	21849527	08	1 (2)	80 (108)

CENTRAL / REMOTE DOOR LOCKING

WIRING DIAGRAM: IF

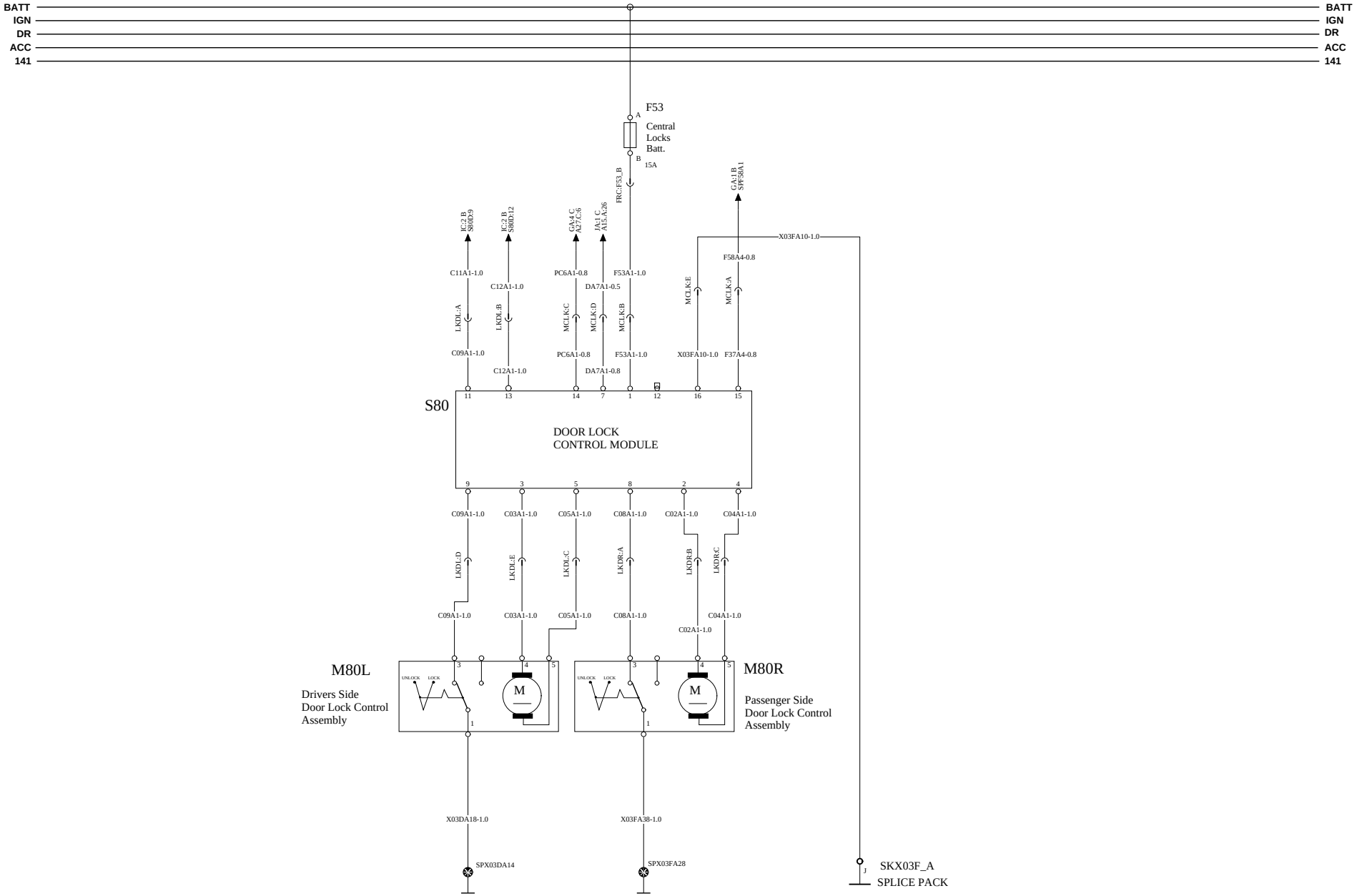

CIGAR LIGHTER / AUX POWER (DASH RADIO SHELF)

WIRING DIAGRAM: IG

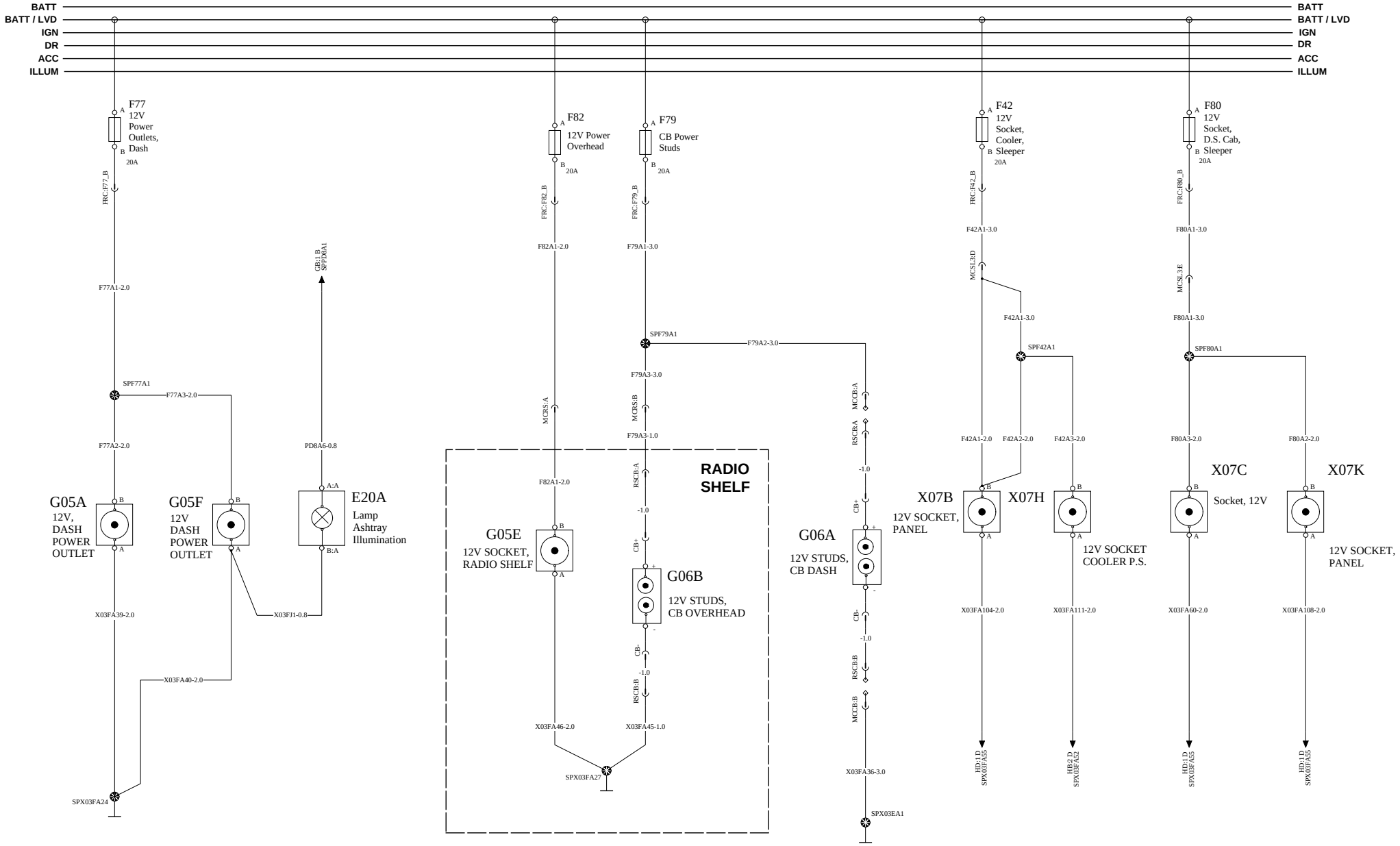

VOLVO Group Trucks Technology	Document title 12V SCHEMATIC VOLVO Document type PRODUCT SCHEMATIC	Document No 21849527	Issue 08	Volume 1 (2)	Page 82 (108)

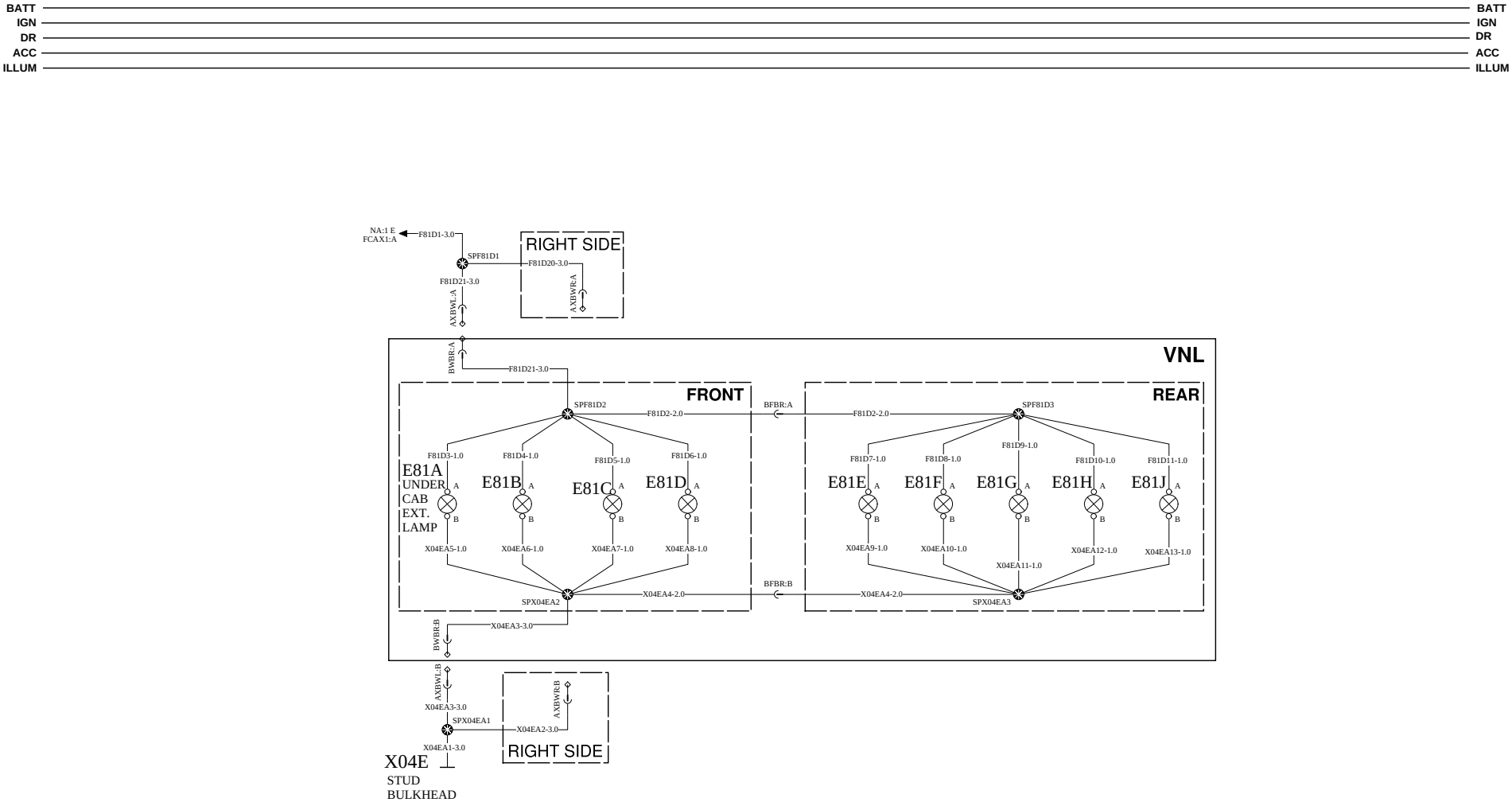
BATT
IGN
DR
ACC
ILLUM
NA:1 E
FCAX1:A
F81D1-3.0
SPF81D1
F81D20-3.0
F81D21-3.0
AXBWL:A
AXBWR:A
RIGHT SIDE
BWBR:A
VNL
FRONT
REAR
SPF81D2
F81D2-2.0
BFBR:A
SPF81D3
F81D3-1.0
F81D4-1.0
F81D5-1.0
F81D6-1.0
F81D7-1.0
F81D8-1.0
F81D9-1.0
F81D10-1.0
F81D11-1.0
E81A
UNDER
CAB
EXT.
LAMP
E81B
E81C
E81D
E81E
E81F
E81G
E81H
E81J
X04EA5-1.0
X04EA6-1.0
X04EA7-1.0
X04EA8-1.0
X04EA9-1.0
X04EA10-1.0
X04EA11-1.0
X04EA12-1.0
X04EA13-1.0
X04EA4-2.0
BFBR:B
SPX04EA2
SPX04EA3
X04EA3-3.0
BWBR:B
AXBWL:B
AXBWR:B
SPX04EA1
X04EA2-3.0
X04EA1-3.0
RIGHT SIDE
X04E
STUD
BULKHEAD

SRS AIRBAG CONTROL

WIRING DIAGRAM: JA

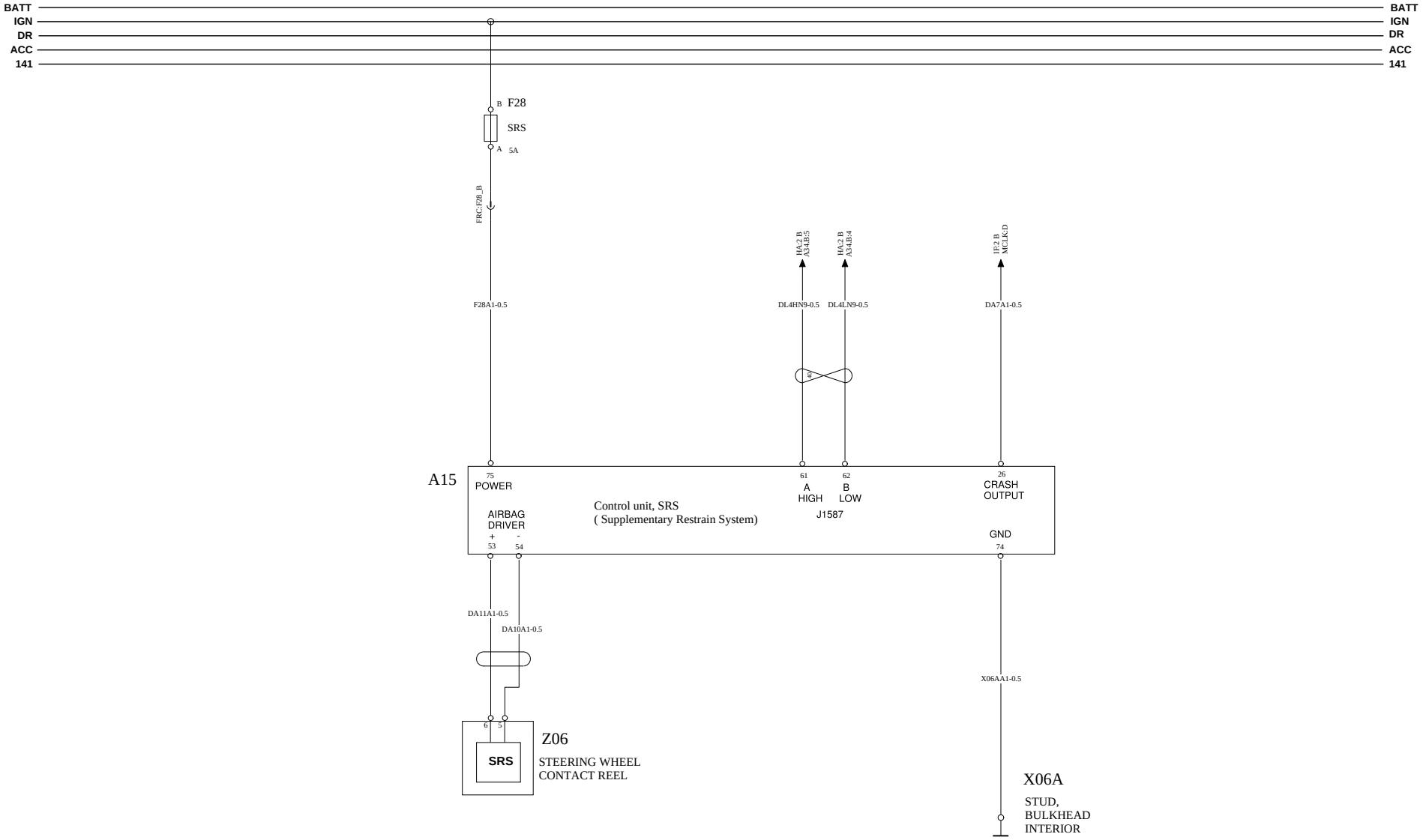

VOLVO Group Trucks Technology	Document title 12V SCHEMATIC VOLVO Document type PRODUCT SCHEMATIC	Document No 21849527	Issue 08	Volume 1 (2)	Page 84 (108)

STEERING WHEEL MODULE / MARKER INTERRUPT

WIRING DIAGRAM: JD

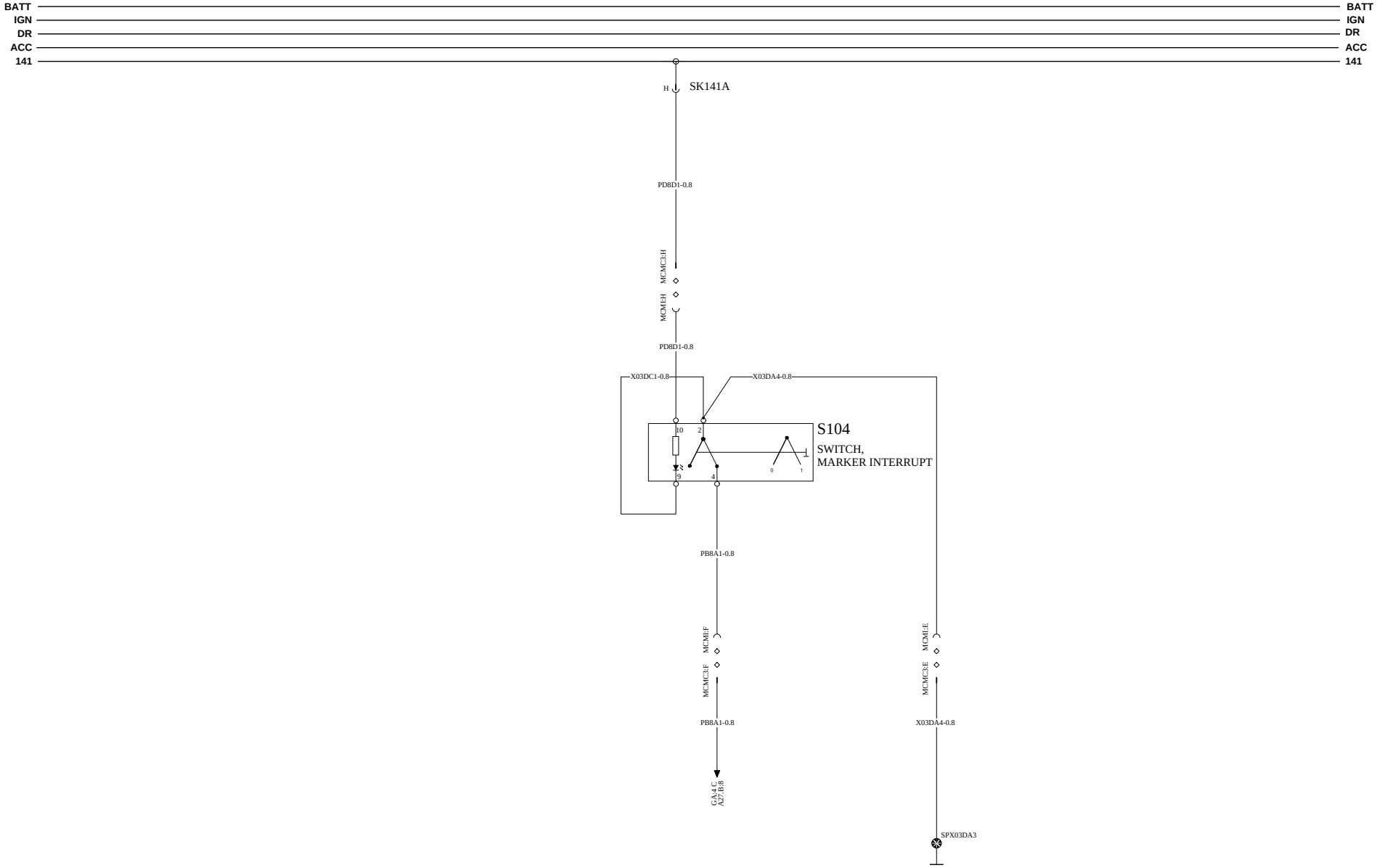

VOLVO Group Trucks Technology	Document title 12V SCHEMATIC VOLVO	Document No	Issue	Volume	Page
	Document type PRODUCT SCHEMATIC	21849527	08	1 (2)	85 (108)

ADAPTIVE CRUISE CONTROL / FUSION

WIRING DIAGRAM: JE

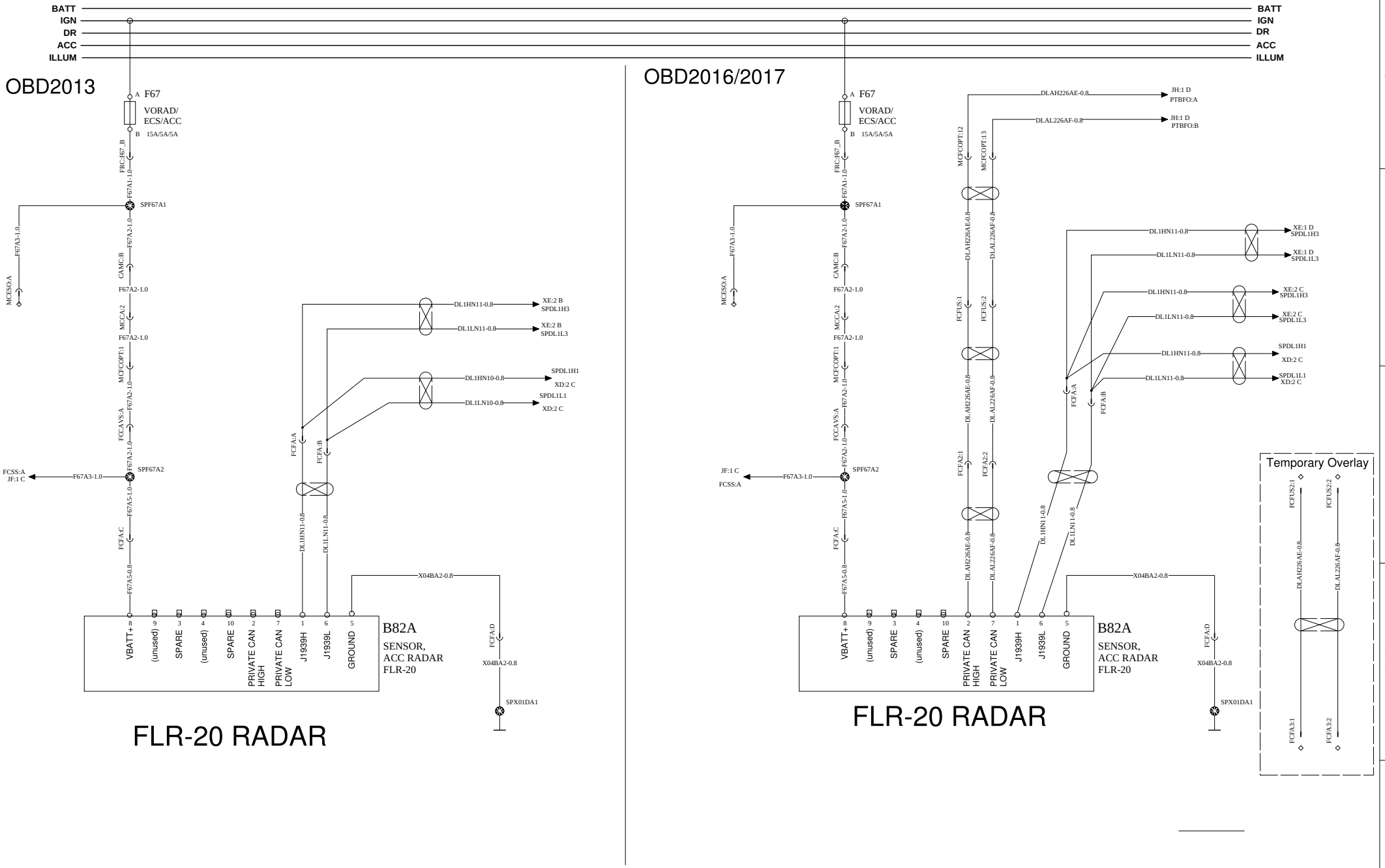

VOLVO Group Trucks Technology	Document title 12V SCHEMATIC VOLVO	Document No	Issue	Volume	Page
	Document type PRODUCT SCHEMATIC	21849527	08	1 (2)	86 (108)

SIDE OBJECT DETECTION SYSTEM

WIRING DIAGRAM: JF

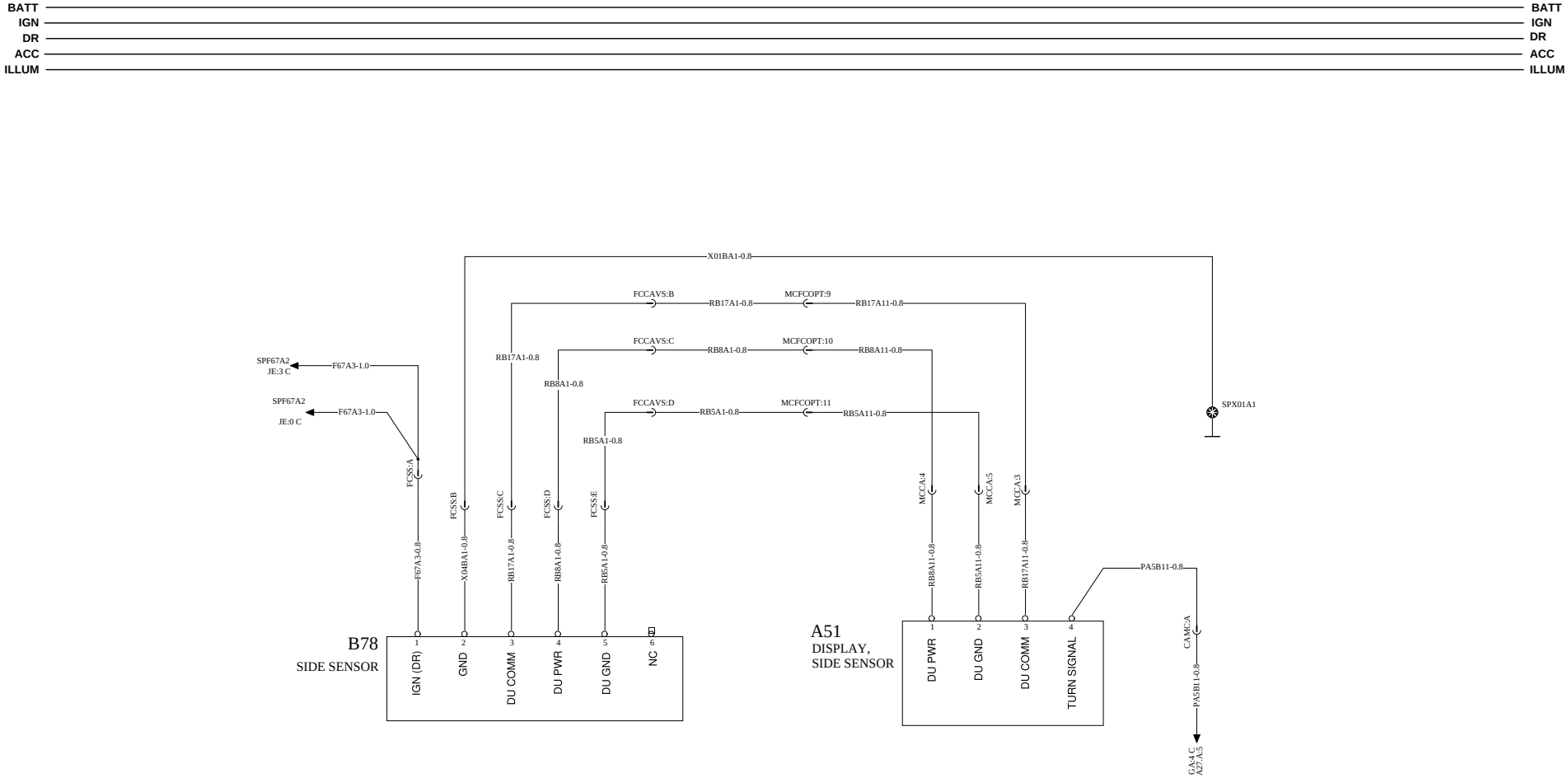

VOLVO Group Trucks Technology	Document title 12V SCHEMATIC VOLVO Document type PRODUCT SCHEMATIC	Document No 21849527	Issue 08	Volume 1 (2)	Page 87 (108)

LANE DEPARTURE WARNING SYSTEM

WIRING DIAGRAM: JG

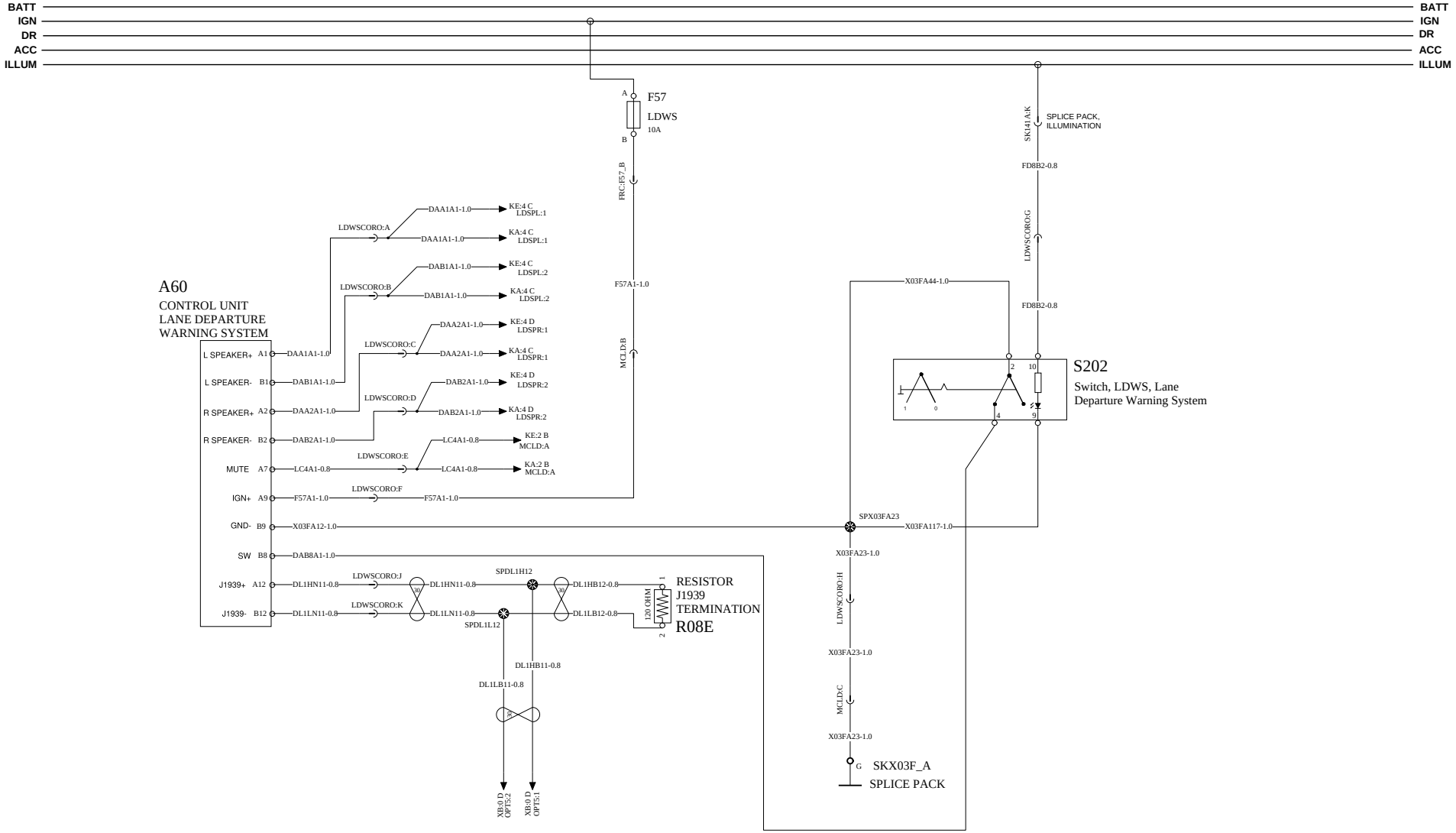

VOLVO Group Trucks Technology	Document title 12V SCHEMATIC VOLVO	Document No	Issue	Volume	Page
	Document type PRODUCT SCHEMATIC	21849527	08	1 (2)	88 (108)

BENDIX FUSION

WIRING DIAGRAM: JH

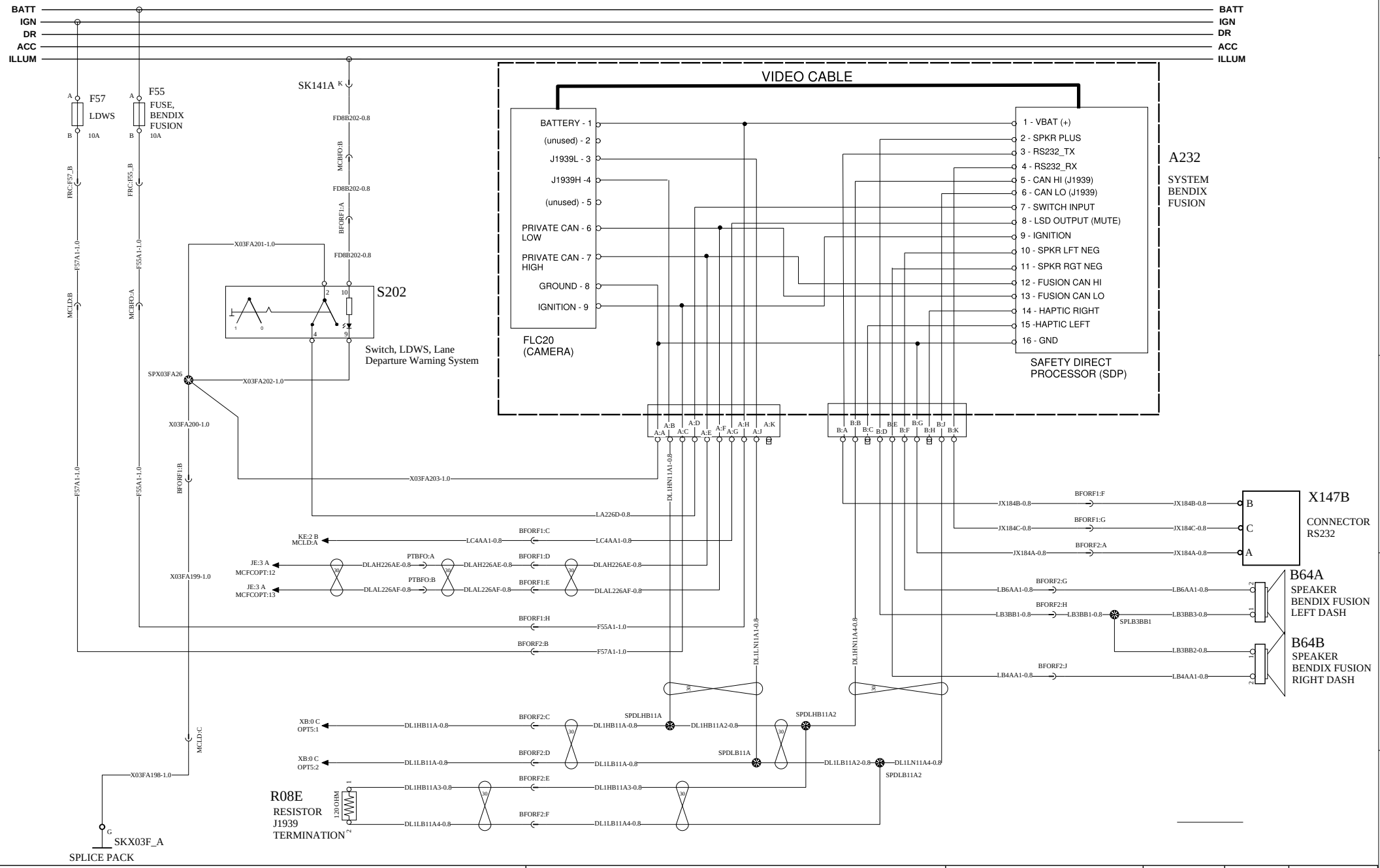

VOLVO Group Trucks Technology	Document title 12V SCHEMATIC VOLVO	Document No	Issue	Volume	Page
	Document type PRODUCT SCHEMATIC	21849527	08	1 (2)	89 (108)

AUDIO SYSTEM:GLAD RADIO 4 SPEAKERS

WIRING DIAGRAM: KA

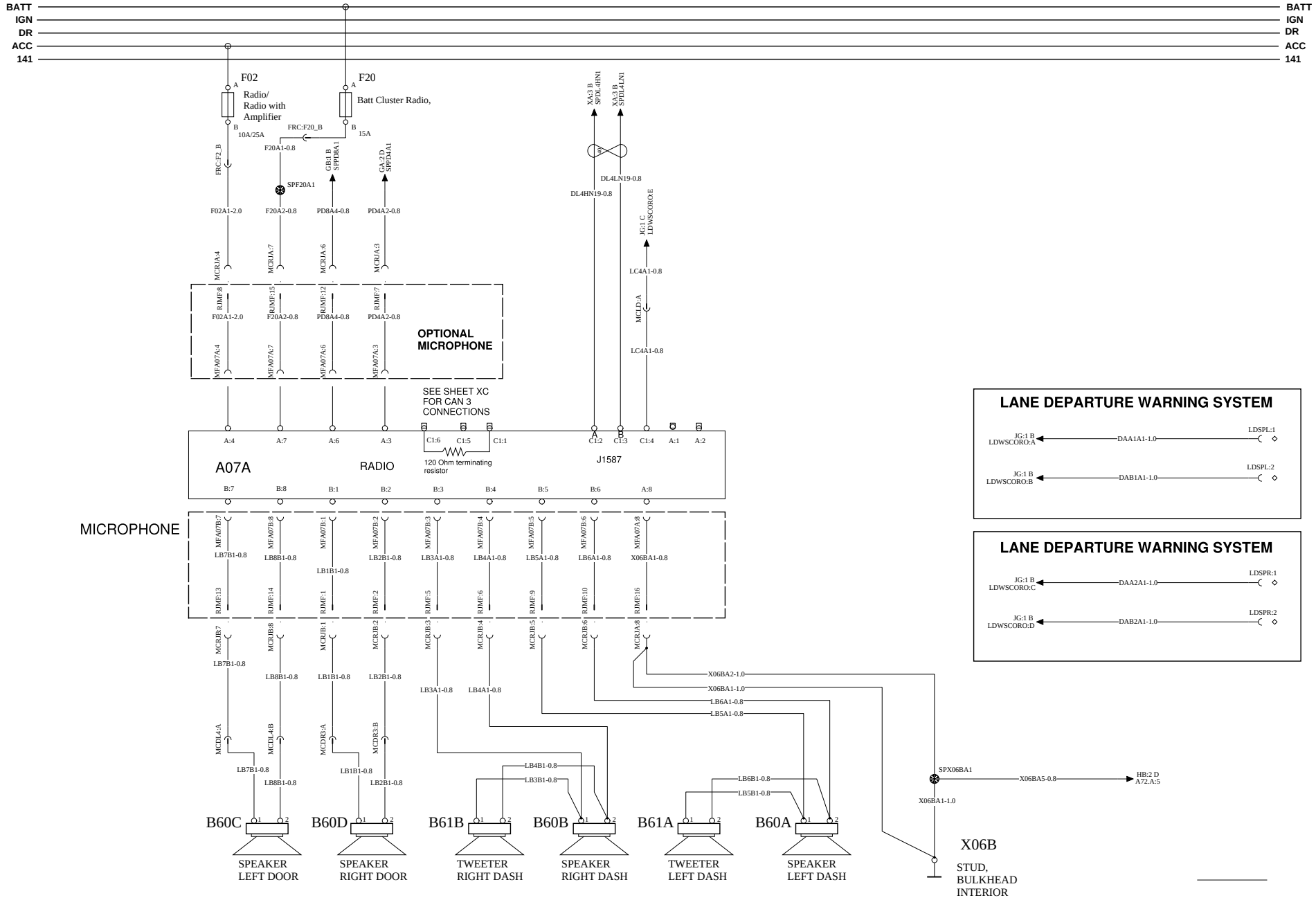

VOLVO Group Trucks Technology	Document title 12V SCHEMATIC VOLVO Document type PRODUCT SCHEMATIC	Document No 21849527	Issue 08	Volume 1 (2)	Page 90 (108)

AUDIO SYSTEM: GLAD RADIO - 6 SPEAKERS

WIRING DIAGRAM: KB

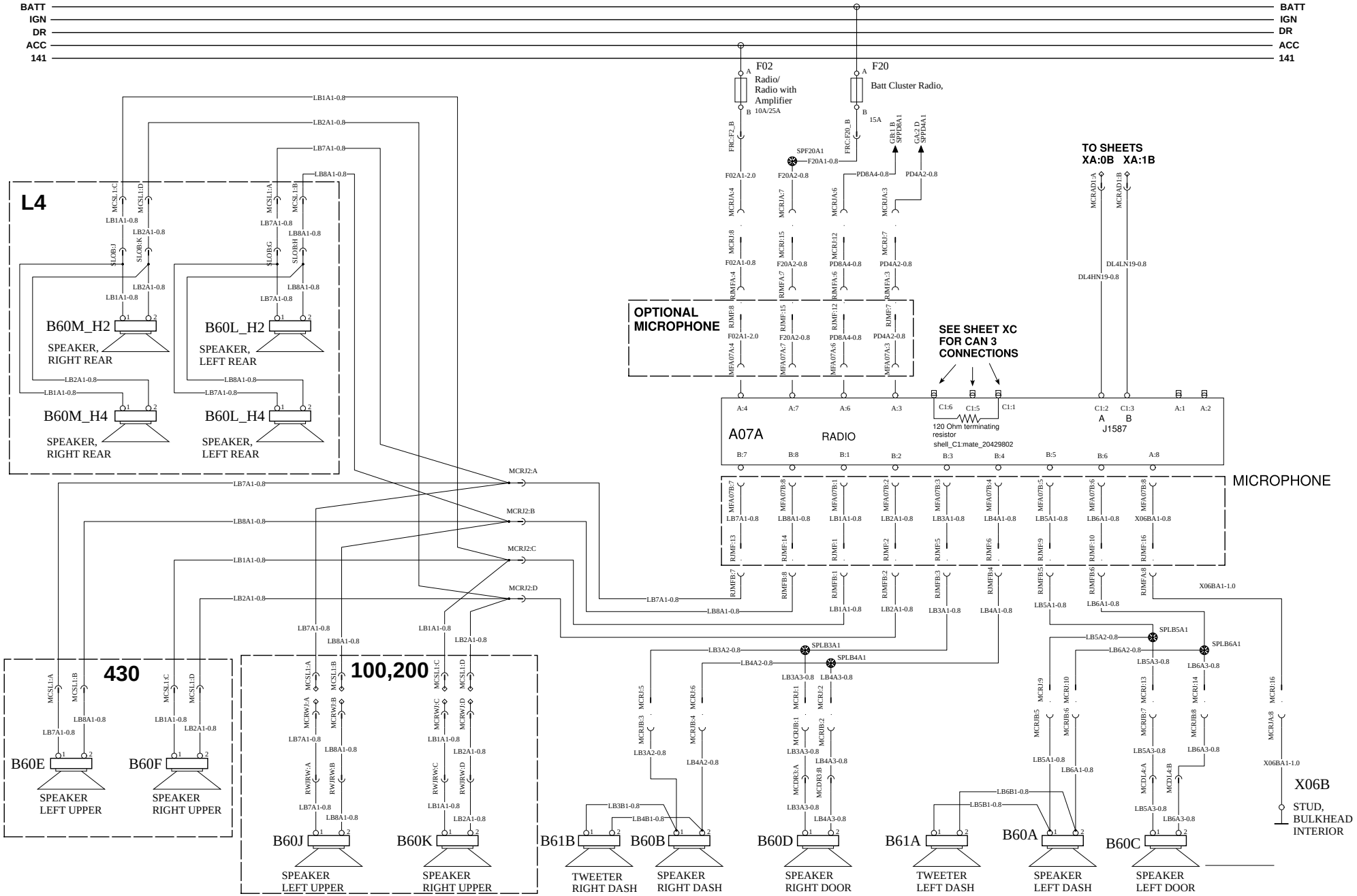

VOLVO Group Trucks Technology	Document title 12V SCHEMATIC VOLVO	Document No	Issue	Volume	Page
	Document type PRODUCT SCHEMATIC	21849527	08	1 (2)	91 (108)

AUDIO SYSTEM - GLAD RADIO 6 SPEAKERS W/SUB, TV PREP

WIRING DIAGRAM: KC

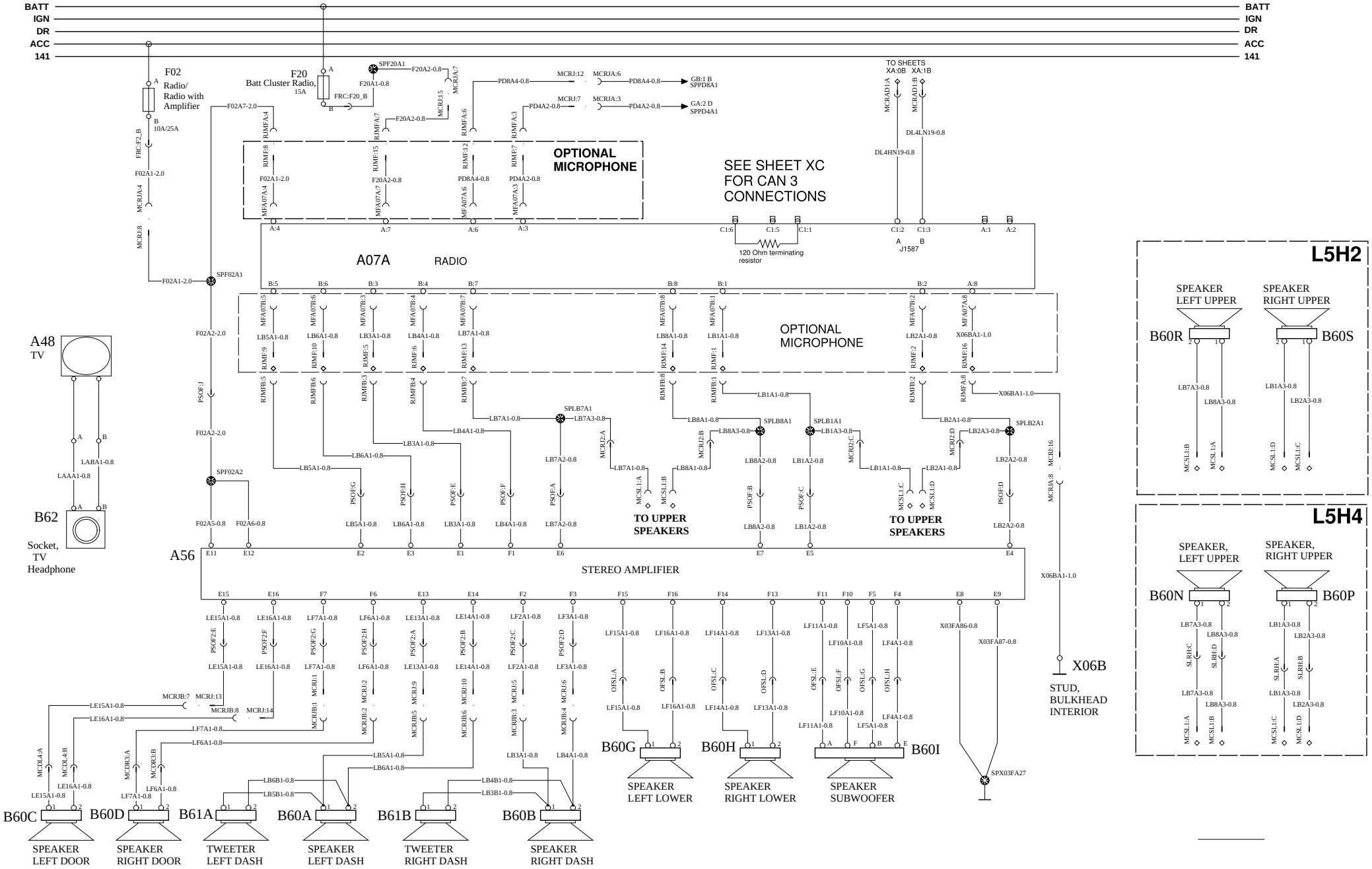

VOLVO Group Trucks Technology	Document title 12V SCHEMATIC VOLVO	Document No	Issue	Volume	Page
	Document type PRODUCT SCHEMATIC	21849527	08	1 (2)	92 (108)

AUDIO SYSTEM - BLUETOOTH/AUX//USB

WIRING DIAGRAM: KD

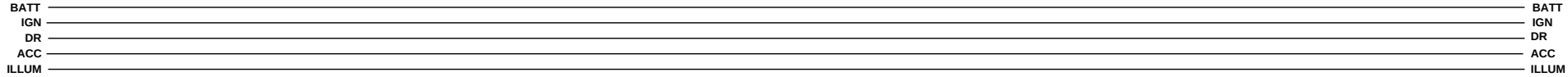

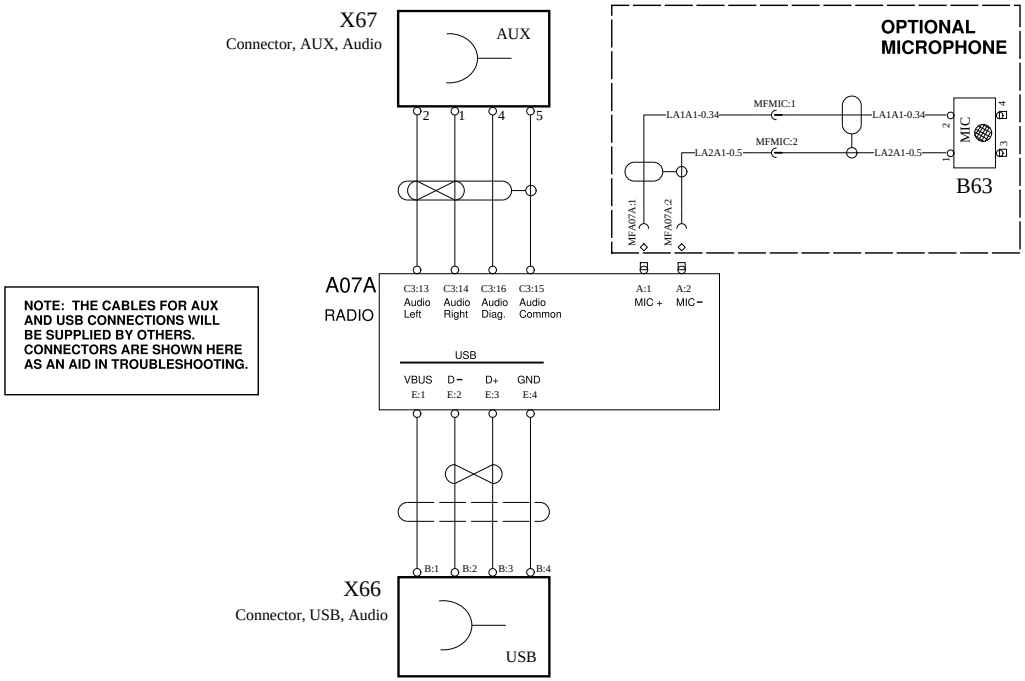

NOTE: THE CABLES FOR AUX AND USB CONNECTIONS WILL BE SUPPLIED BY OTHERS. CONNECTORS ARE SHOWN HERE AS AN AID IN TROUBLESHOOTING.

GLAD RADIO

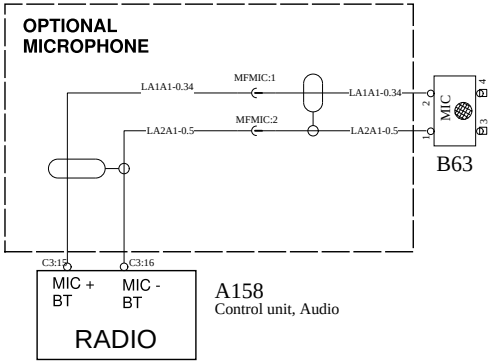

DEA 500 SERIES RADIO
(REPLACES GLAD RADIO)

VOLVO Group Trucks Technology	Document title 12V SCHEMATIC VOLVO	Document No	Issue	Volume	Page
	Document type PRODUCT SCHEMATIC	21849527	08	1 (2)	93 (108)

AUDIO SYSTEM: DEA 500 SERIES RADIO - 4 SPEAKERS

WIRING DIAGRAM: KE

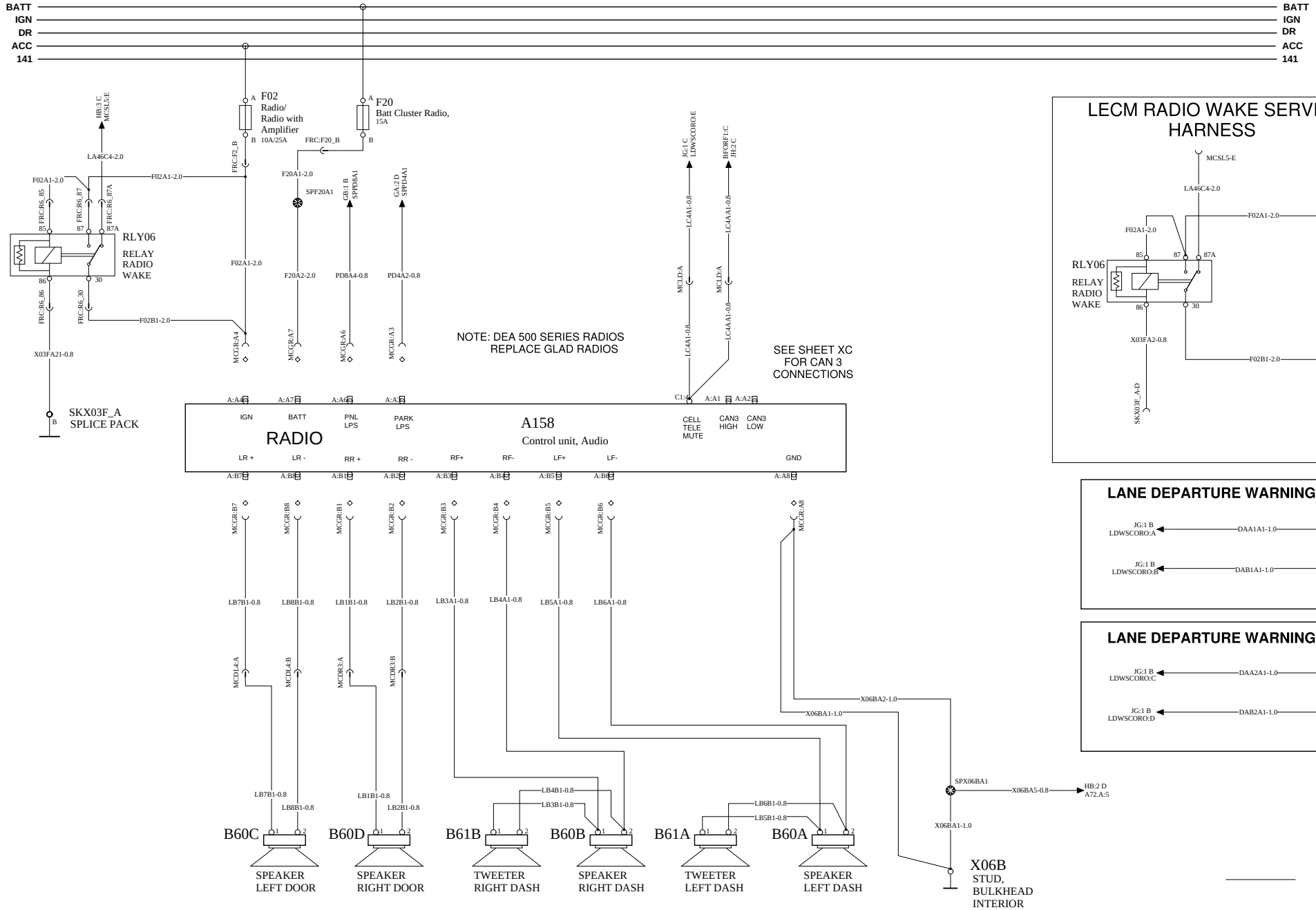

VOLVO Group Trucks Technology	Document title 12V SCHEMATIC VOLVO	Document No	Issue	Volume	Page
	Document type PRODUCT SCHEMATIC	21849527	08	1 (2)	94 (108)

AUDIO SYSTEM: DEA 500 SERIES RADIO - 6 SPEAKERS

WIRING DIAGRAM: KF

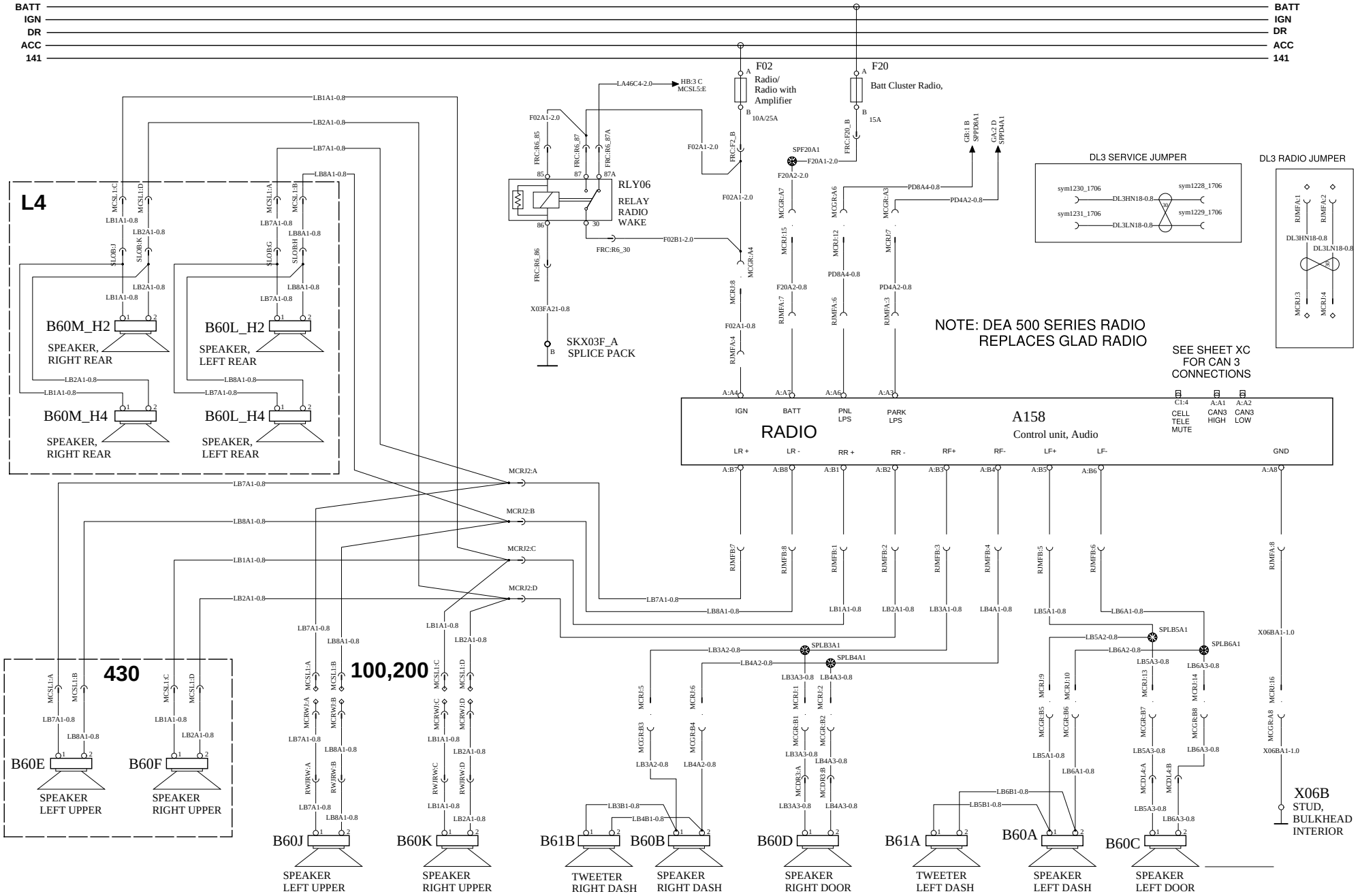

VOLVO Group Trucks Technology	Document title 12V SCHEMATIC VOLVO	Document No	Issue	Volume	Page
	Document type PRODUCT SCHEMATIC	21849527	08	1 (2)	95 (108)

AUDIO SYSTEM - DEA 500 SERIES RADIO - 6 SPEAKERS W/SUB, TV PREP

WIRING DIAGRAM: KG

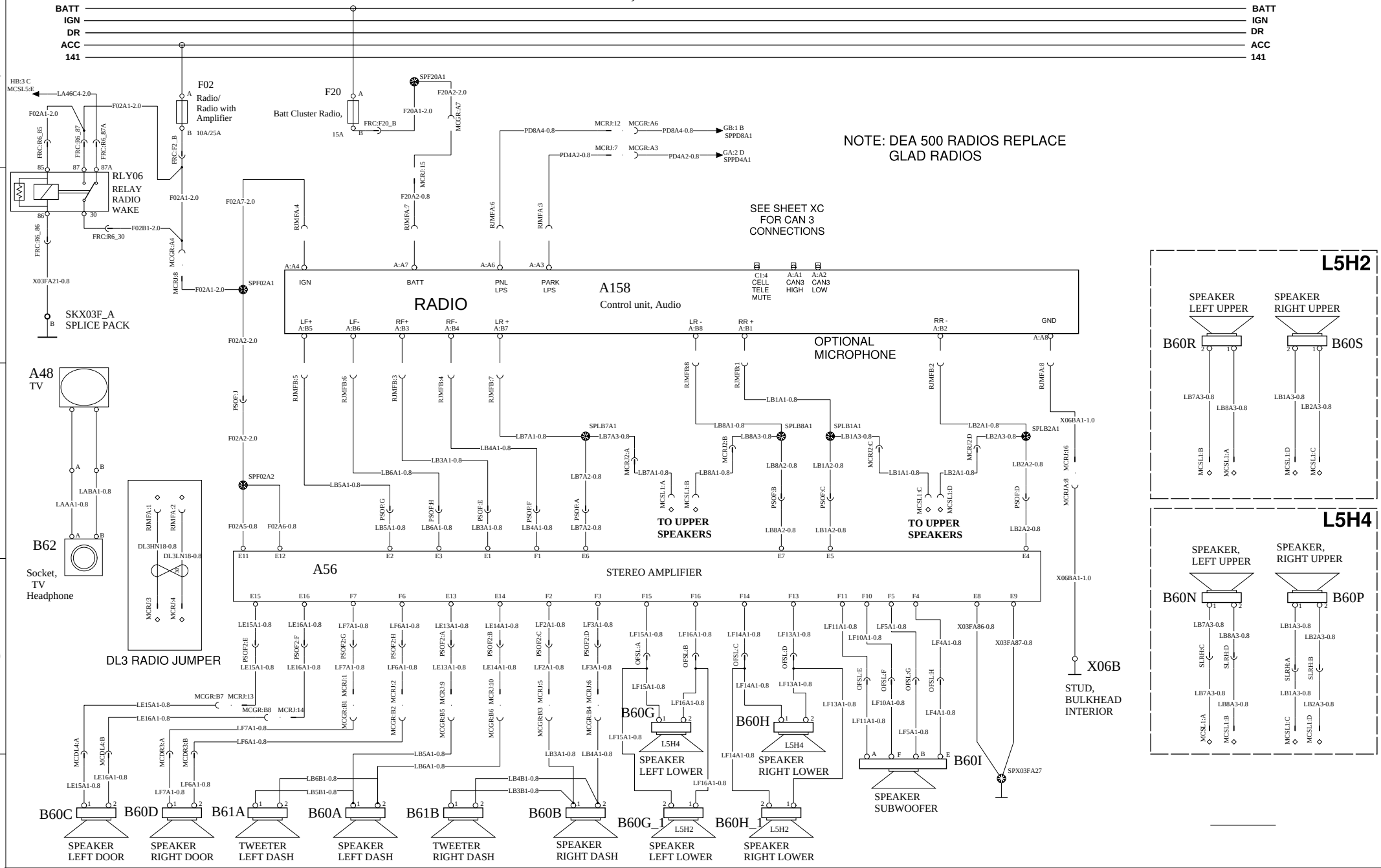

VOLVO Group Trucks Technology	Document title 12V SCHEMATIC VOLVO Document type PRODUCT SCHEMATIC	Document No 21849527	Issue 08	Volume 1 (2)	Page 96 (108)

AUDIO SYSTEM: DEA 500 SERIES RADIO JUMPER

WIRING DIAGRAM: KH

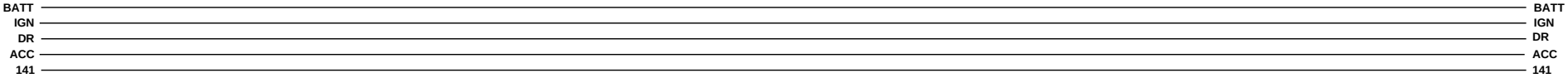

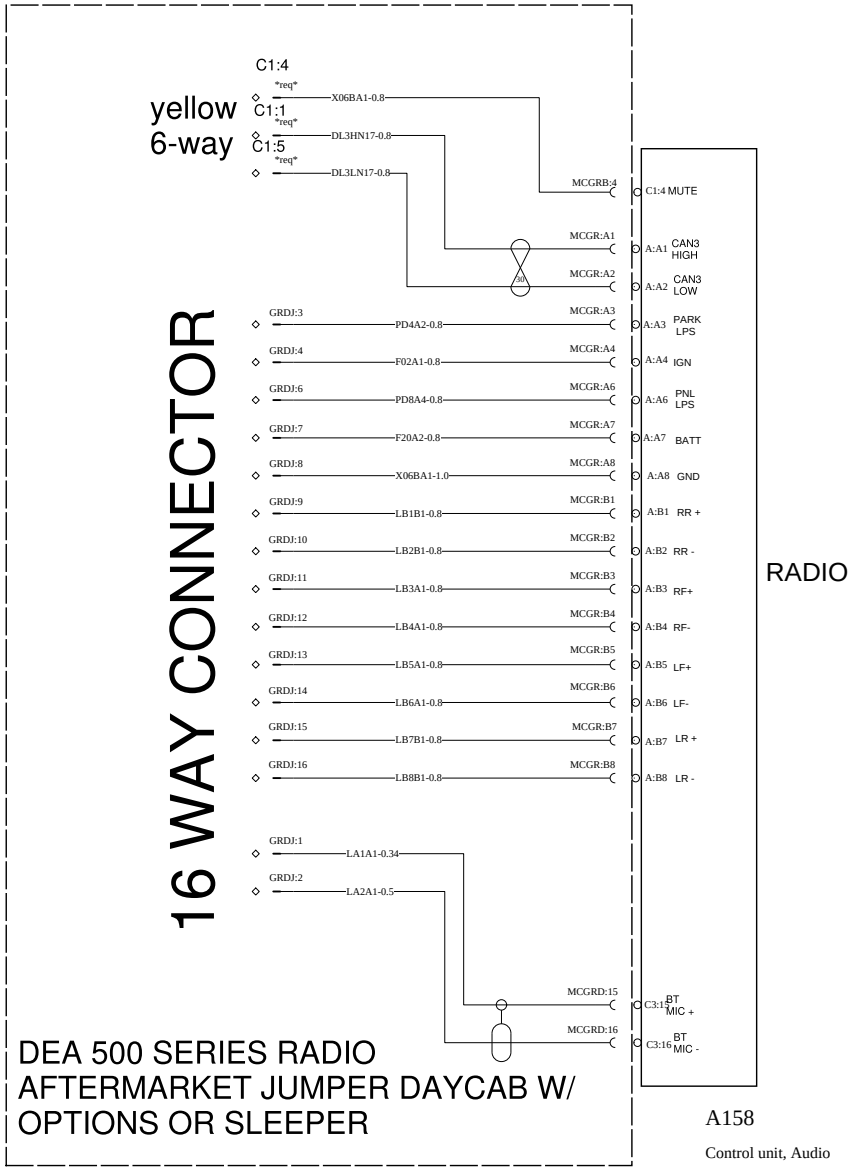

DEA 500 SERIES RADIO
AFTERMARKET JUMPER DAYCAB W/
OPTIONS OR SLEEPER

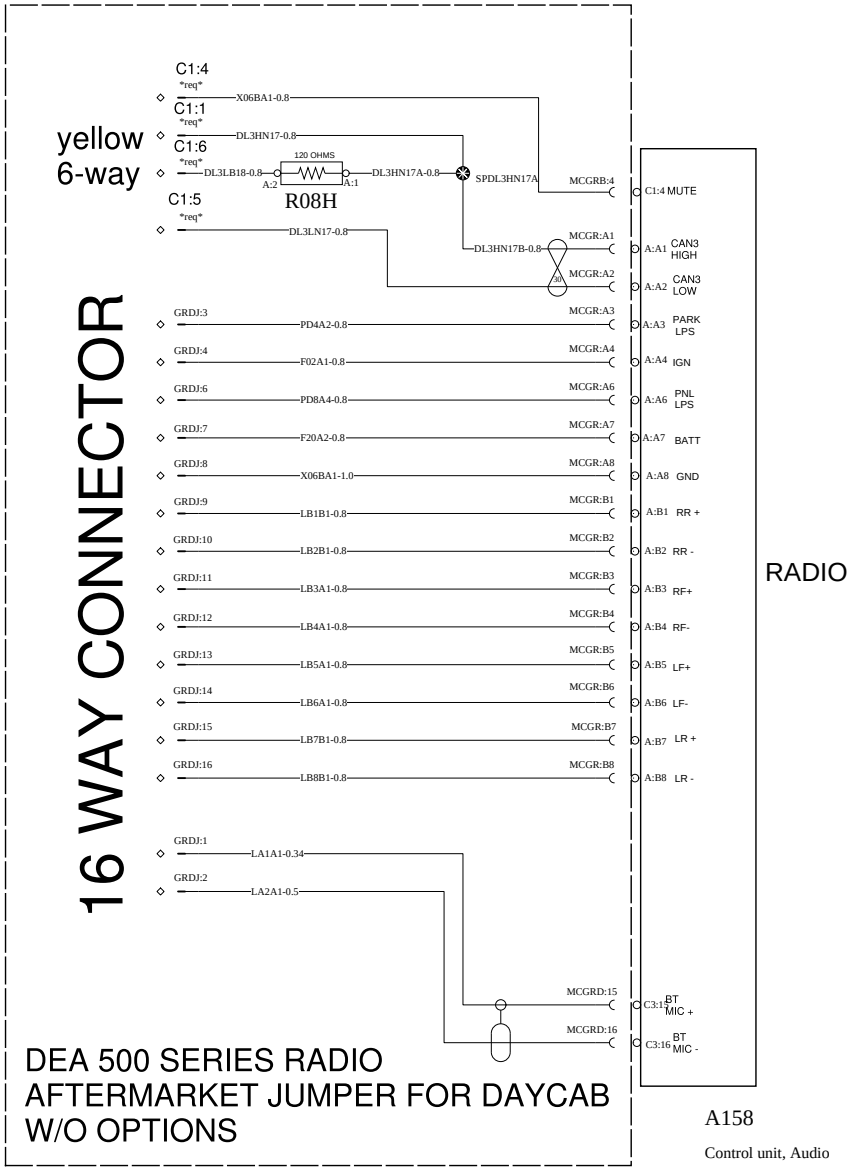

DEA 500 SERIES RADIO
AFTERMARKET JUMPER FOR DAYCAB
W/O OPTIONS

TRAILER CABLE

WIRING DIAGRAM: MA

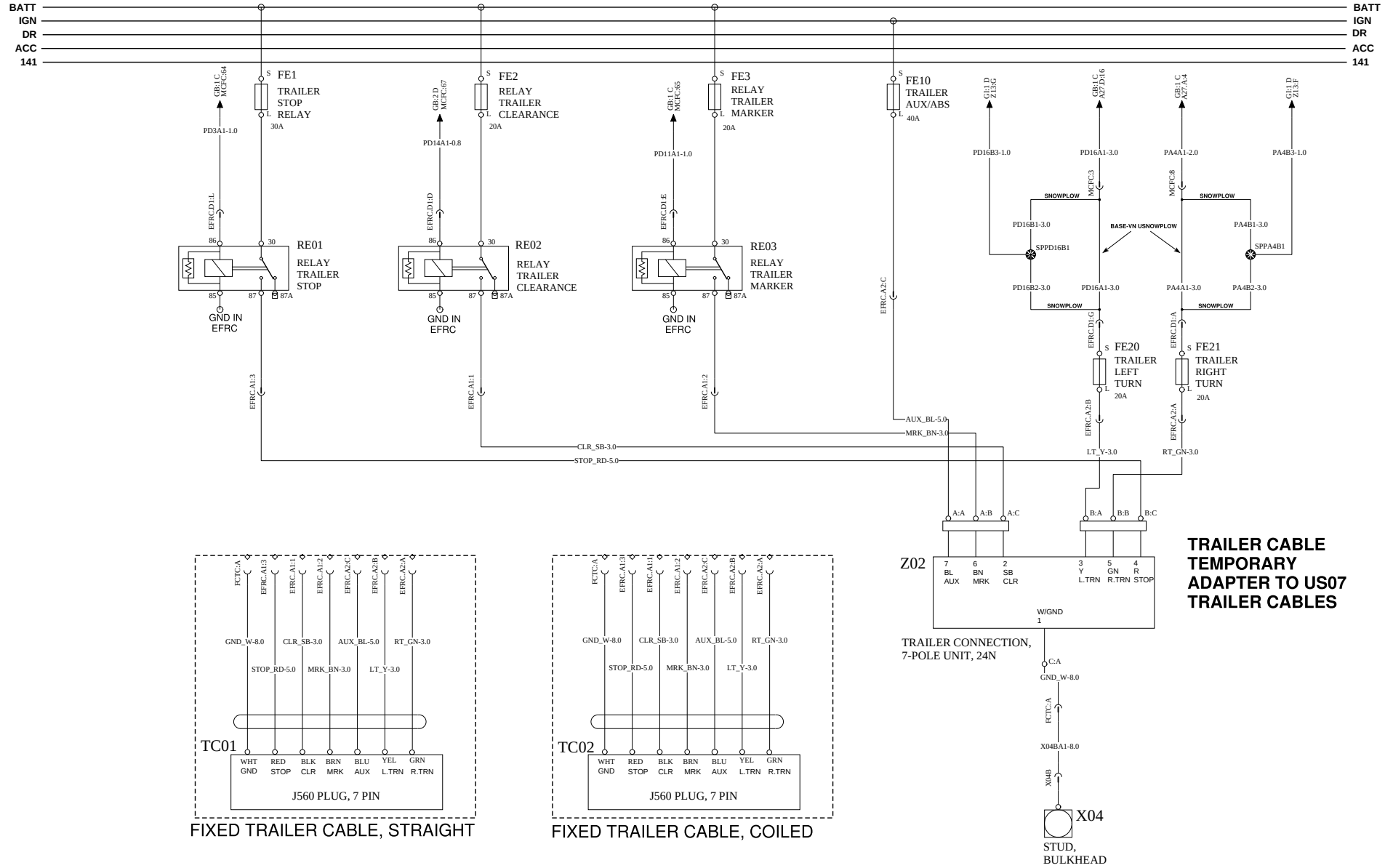

VOLVO Group Trucks Technology	Document title 12V SCHEMATIC VOLVO Document type PRODUCT SCHEMATIC	Document No 21849527	Issue 08	Volume 1 (2)	Page 98 (108)

TRAILER CABLE OPTIONS

WIRING DIAGRAM: MB

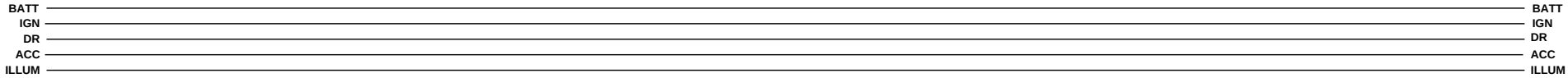

TRAILER CABLE EXTENSION CABLE

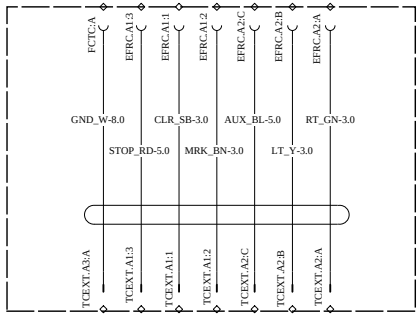

TRAILER CABLE EOF RECEPTACLE

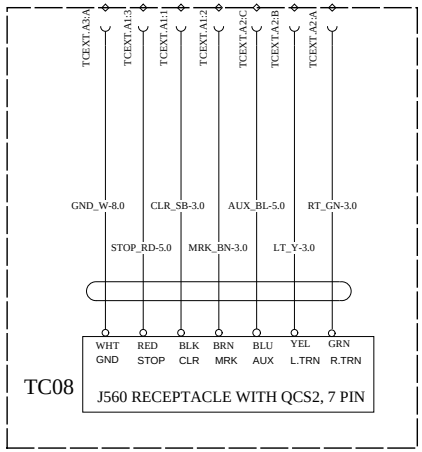

DETACHABLE TRAILER CABLES STRAIGHT / COILED

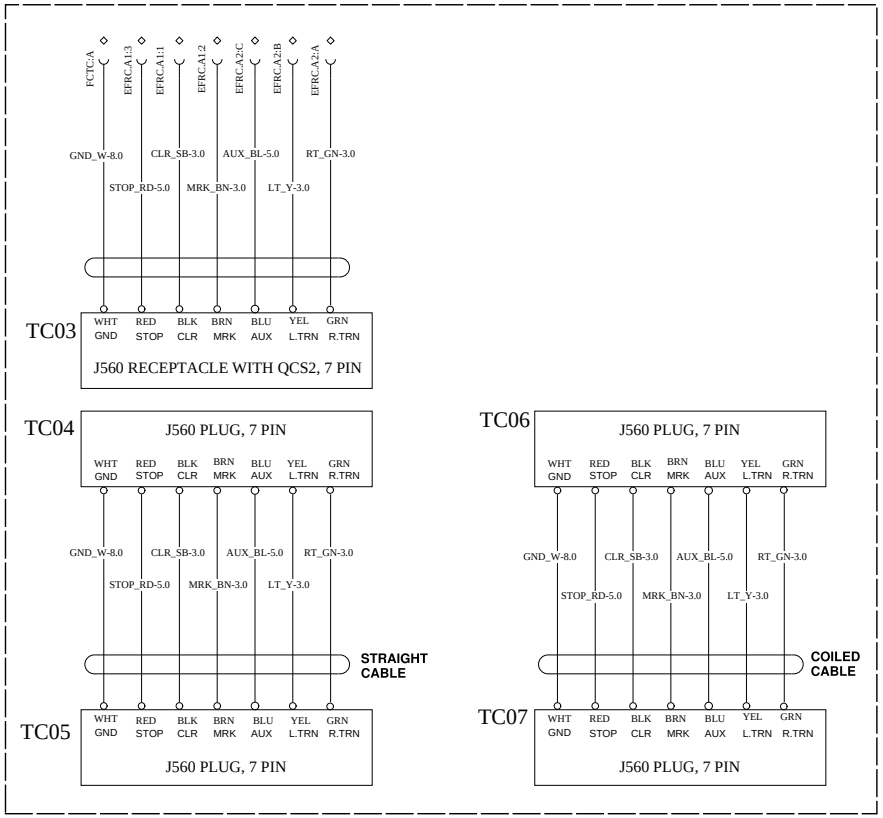

DETACHABLE TRAILER CABLE STRAIGHT ISO 3731

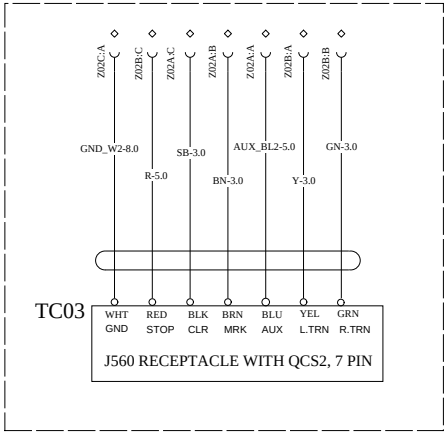

TRAILER CABLES/BODY BUILDER OPTIONS

WIRING DIAGRAM: MC

BATT
IGN
DR
ACC
ILLUM

TRAILER CABLE BODY BUILDER WYE END OPTION

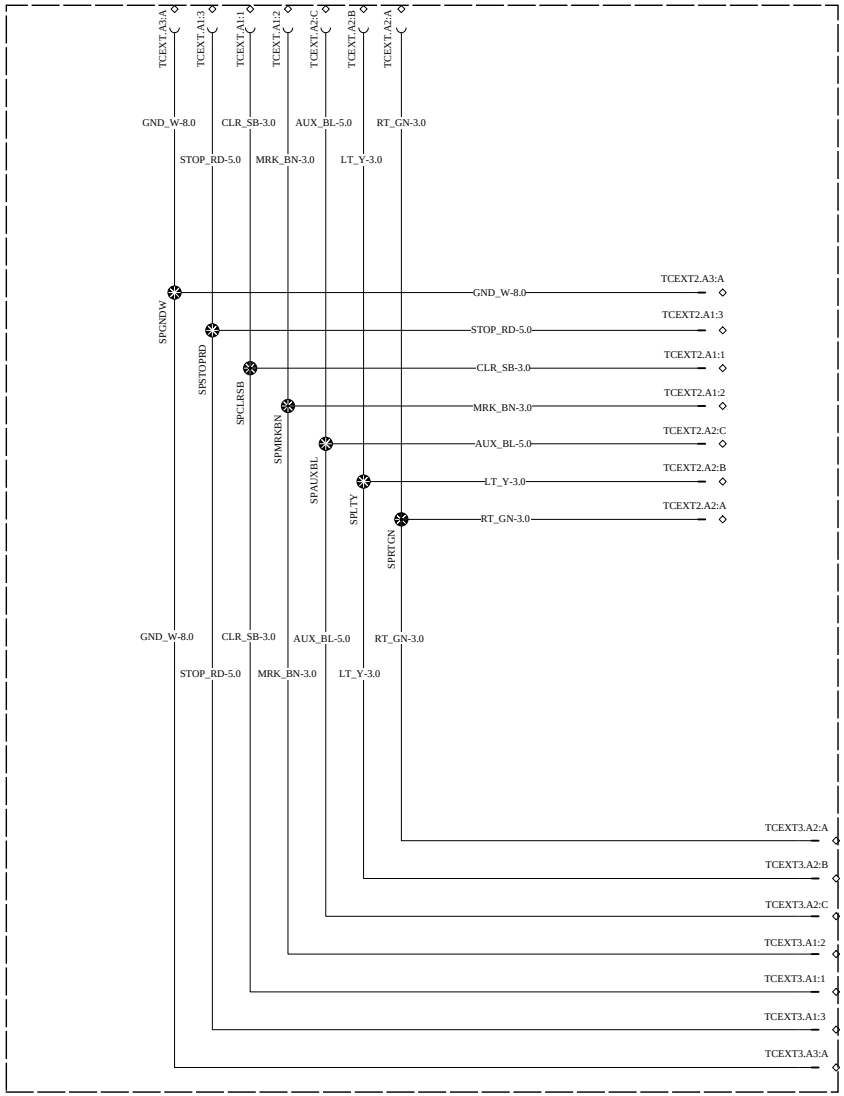

TRAILER CABLE ISO 3731 WYE END OPTION

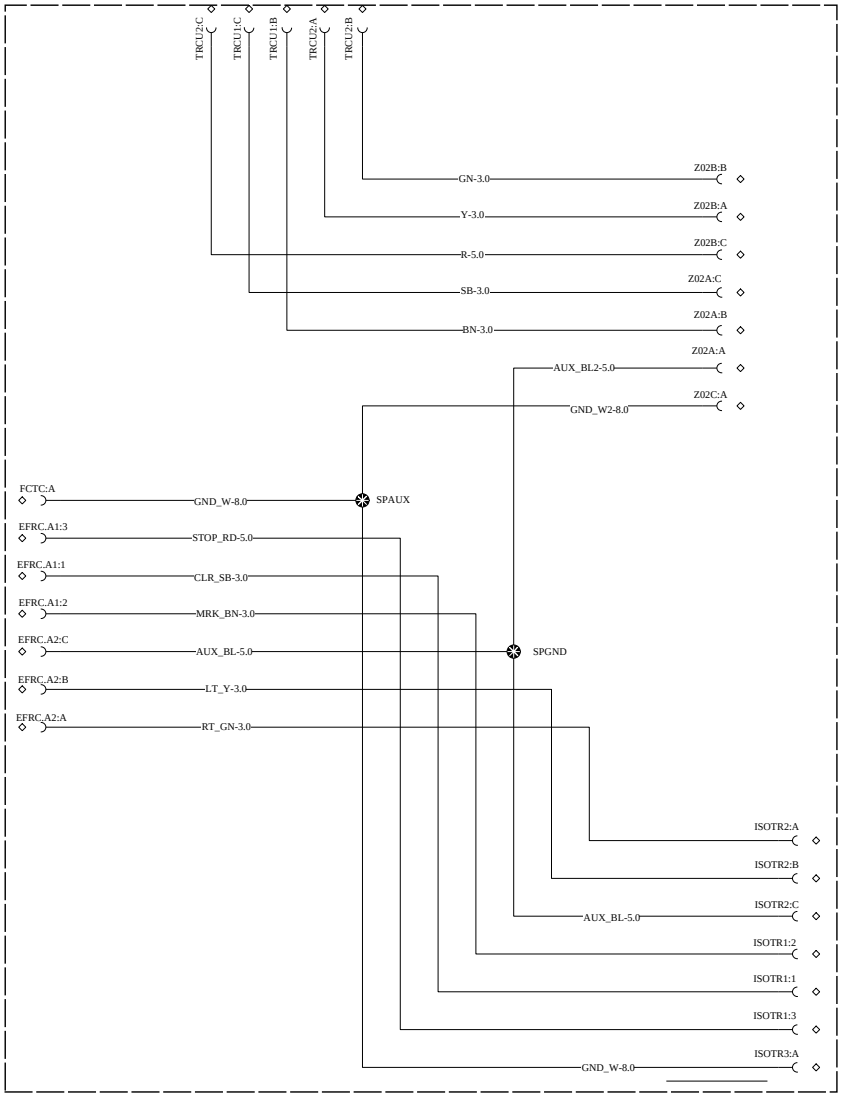

VOLVO Group Trucks Technology	Document title 12V SCHEMATIC VOLVO	Document No	Issue	Volume	Page
	Document type PRODUCT SCHEMATIC	21849527	08	1 (2)	100 (108)

AUXILIARY SWITCHES

WIRING DIAGRAM: NA

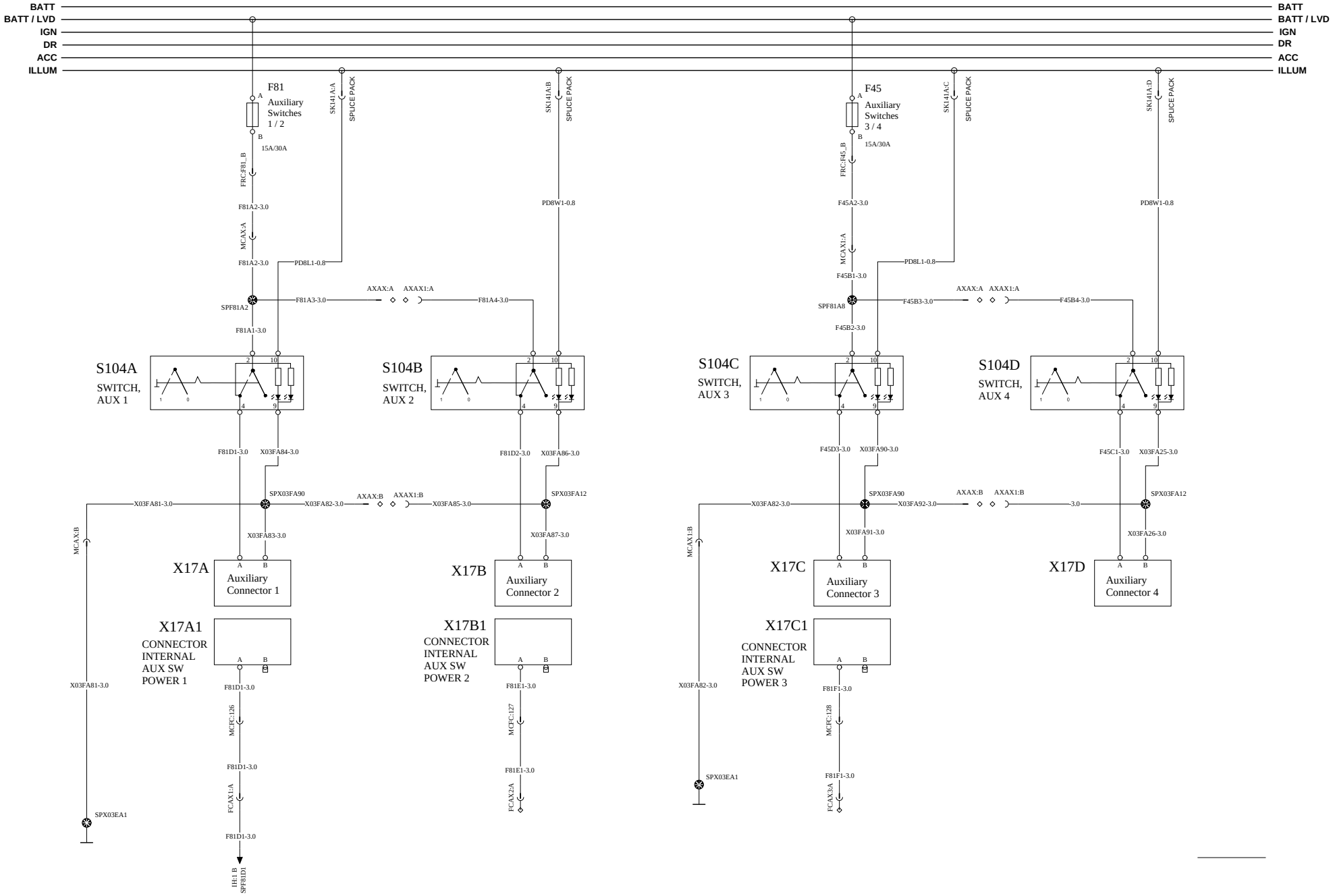

VOLVO Group Trucks Technology	Document title: 12V SCHEMATIC VOLVO Document type: PRODUCT SCHEMATIC	Document No: 21849527	Issue: 08	Volume: 1 (2)	Page: 101 (108)

H. D. POWER LIFT GATE

WIRING DIAGRAM: ND

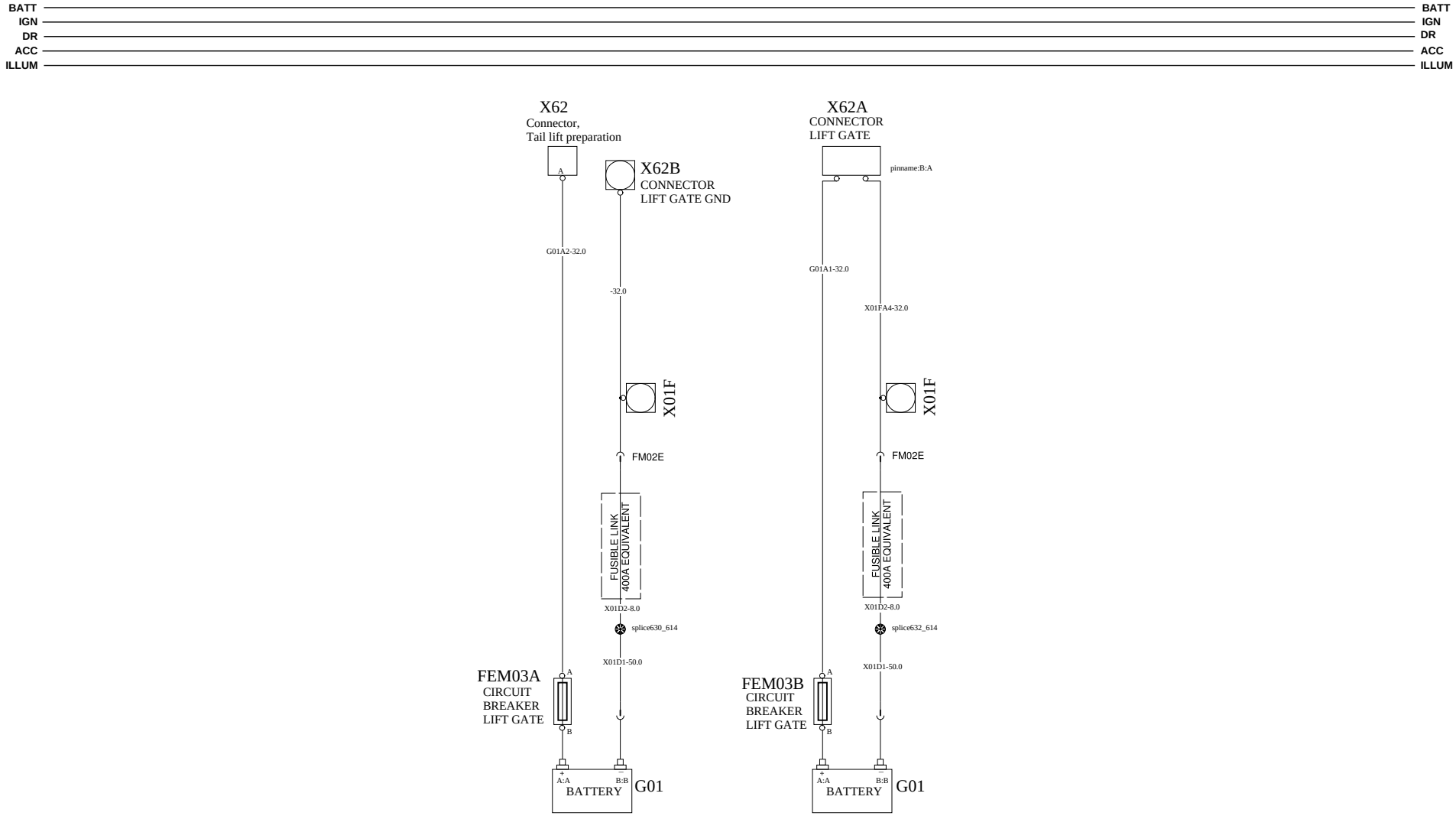

VOLVO Group Trucks Technology	Document title 12V SCHEMATIC VOLVO	Document No	Issue	Volume	Page
	Document type PRODUCT SCHEMATIC	21849527	08	1 (2)	102 (108)

DIAGNOSTICS 1/3 (DL4 - J1587 & DL2 - J2284)

WIRING DIAGRAM: XA

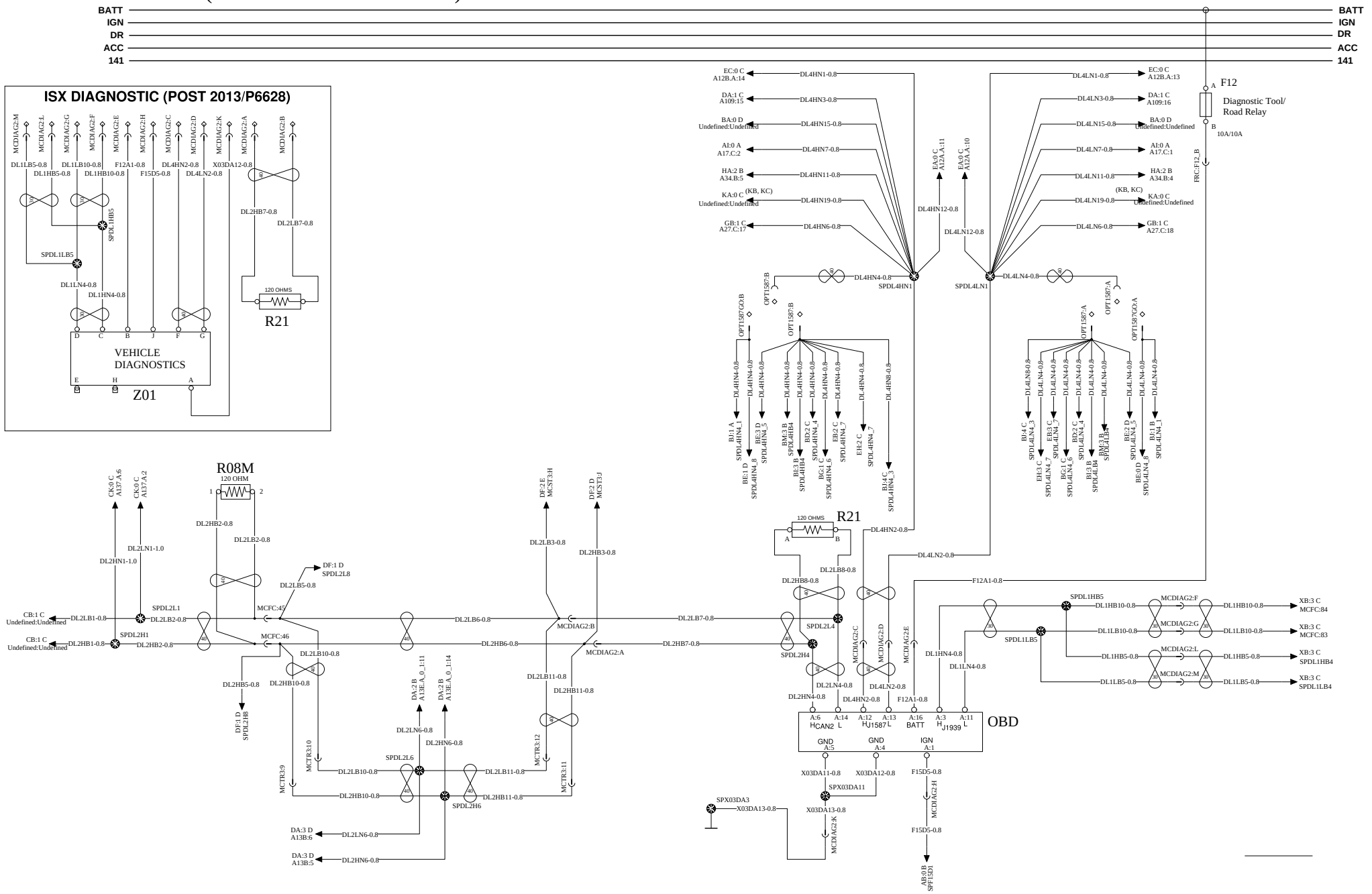

Document title	Document No	Issue	Volume	Page
12V SCHEMATIC VOLVO	21849527	08	1 (2)	103 (108)
Document type: PRODUCT SCHEMATIC				

VOLVO Group Trucks Technology

WIRING DIAGRAM: XB

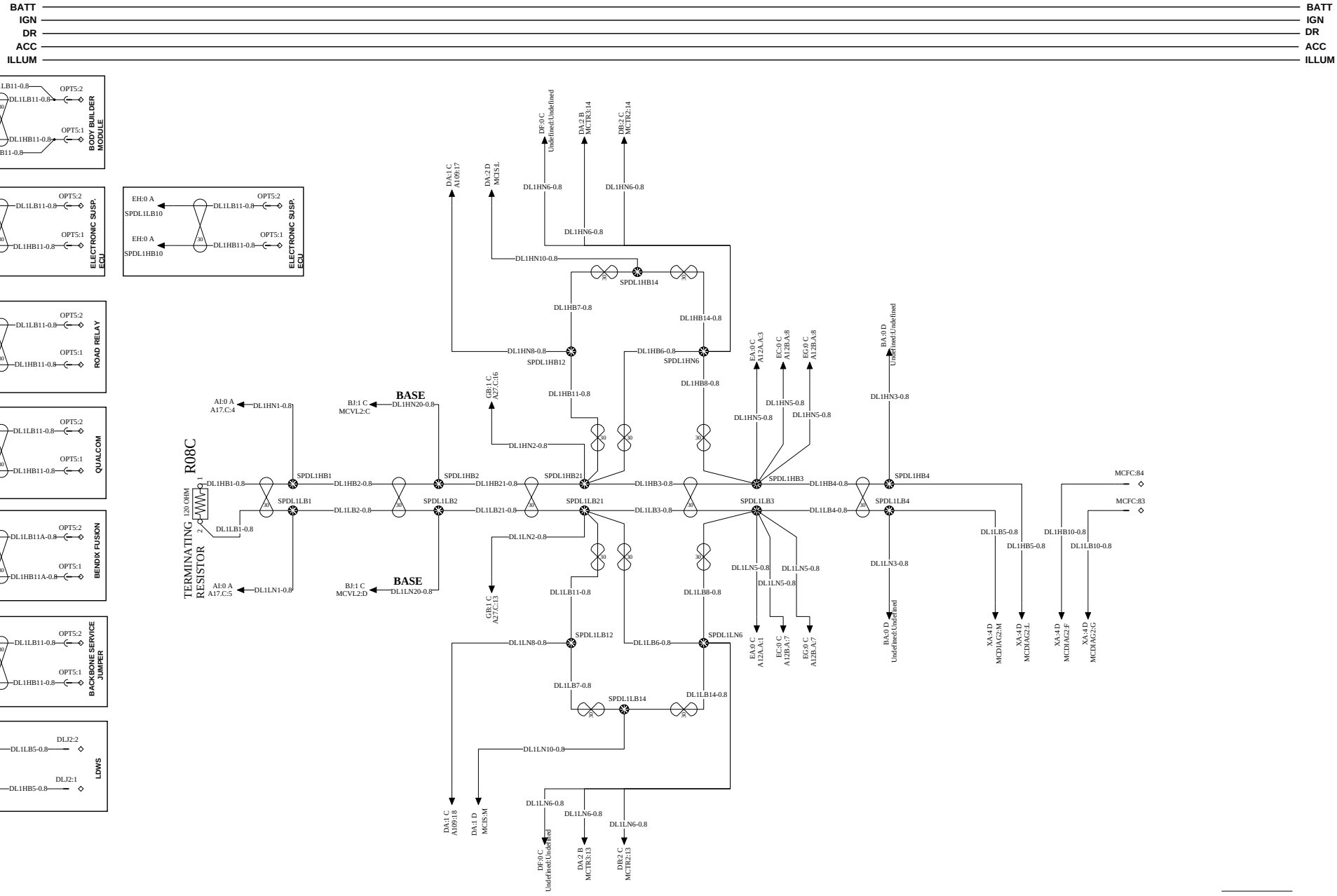

Document title	Document No	Issue	Volume	Page
12V SCHEMATIC VOLVO	21849527	08	1 (2)	104 (108)
Document type: PRODUCT SCHEMATIC				

VOLVO Group Trucks Technology

WIRING DIAGRAM: XC

BATT
IGN
DR
ACC
ILLUM

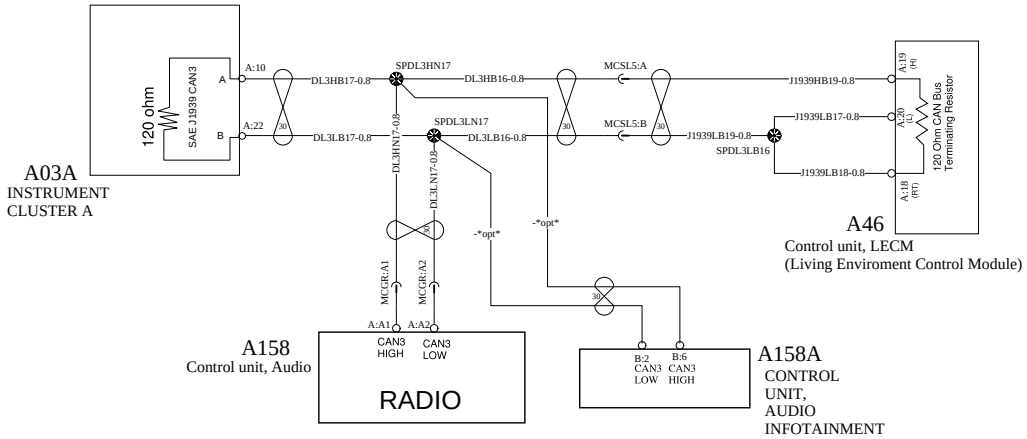

DEA 500 Series & Infotainment Radio (Sleeper)

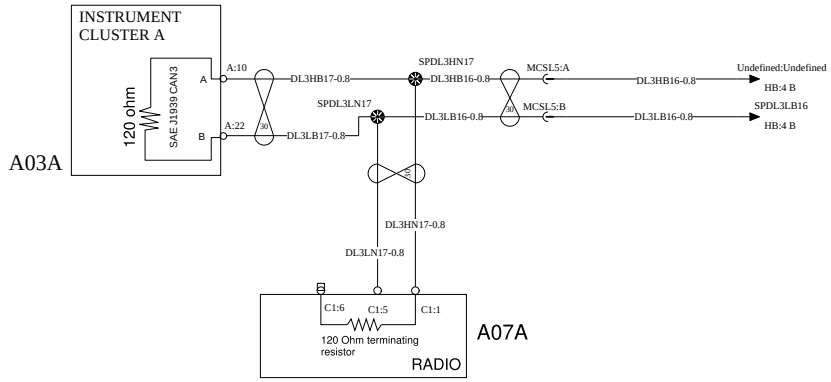

GLAD Radio (Sleeper)

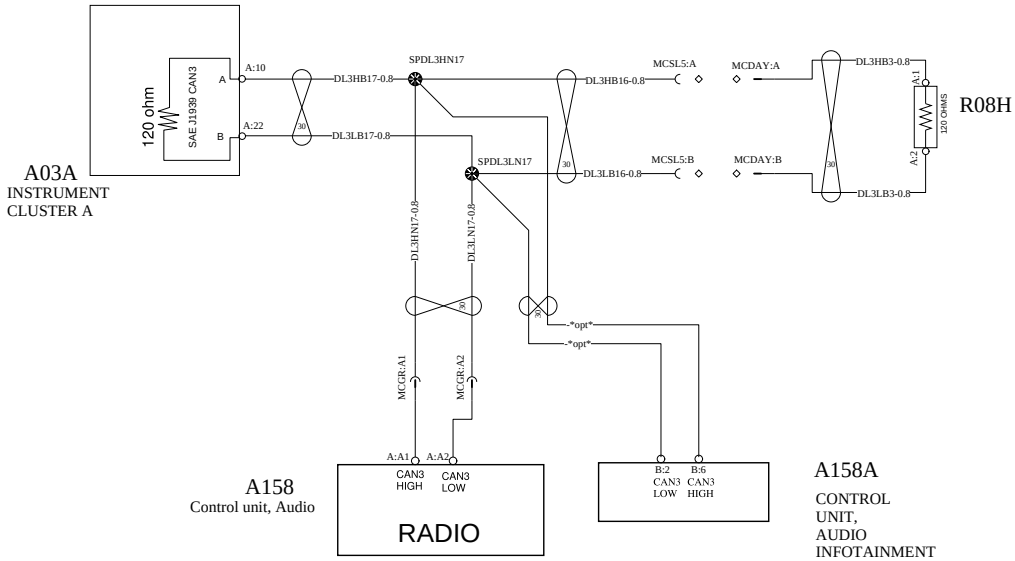

DEA 500 Series & Infotainment Radio (Daycab)

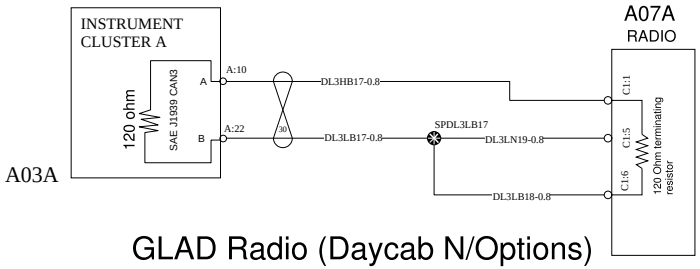

GLAD Radio (Daycab N/Options)

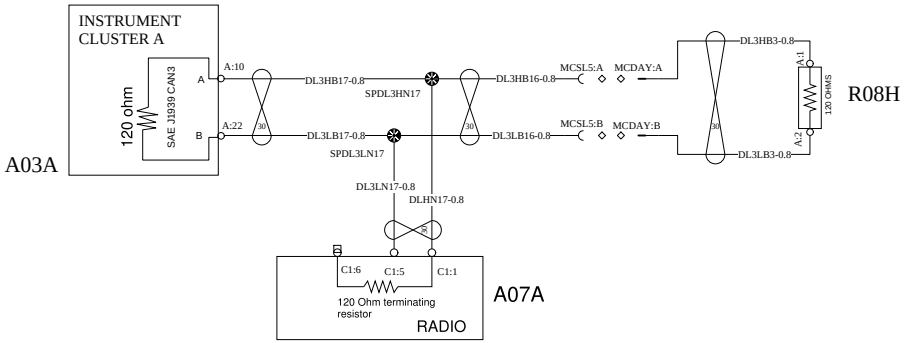

GLAD Radio (Daycab W/Options)

VOLVO Group Trucks Technology	Document title 12V SCHEMATIC VOLVO	Document No	Issue	Volume	Page
	Document type PRODUCT SCHEMATIC	21849527	08	1 (2)	105 (108)

BATT
IGN
DR
ACC
ILLUM

VOLVO ENGINE

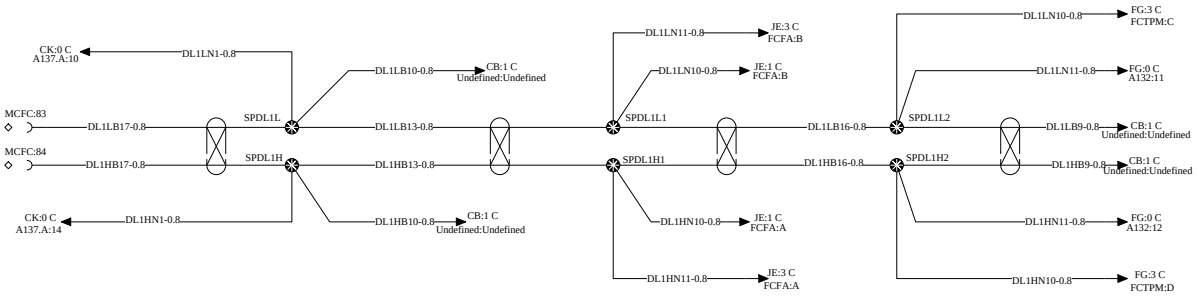

BATT
IGN
DR
ACC
ILLUM

ISX ENGINE 2013

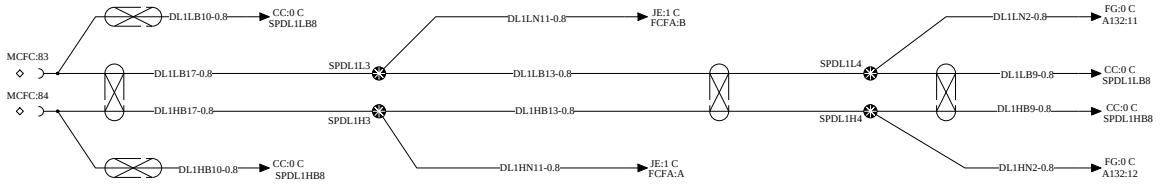

ISX ENGINE 2016

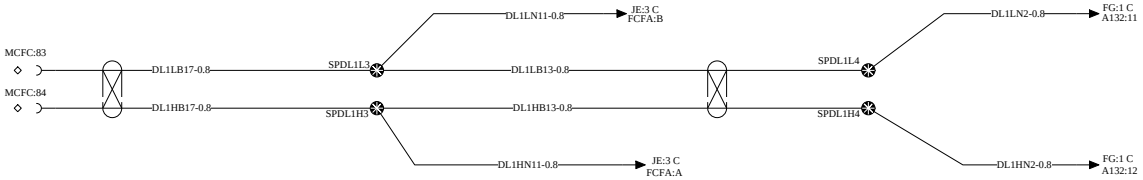

ISX ENGINE 2017

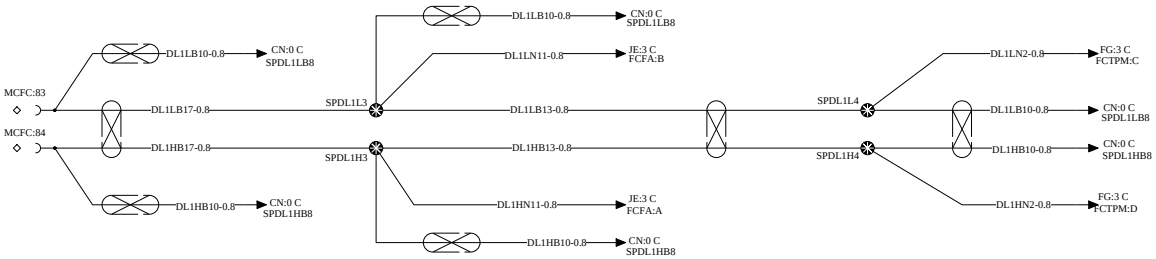

WIRING DIAGRAM : XF

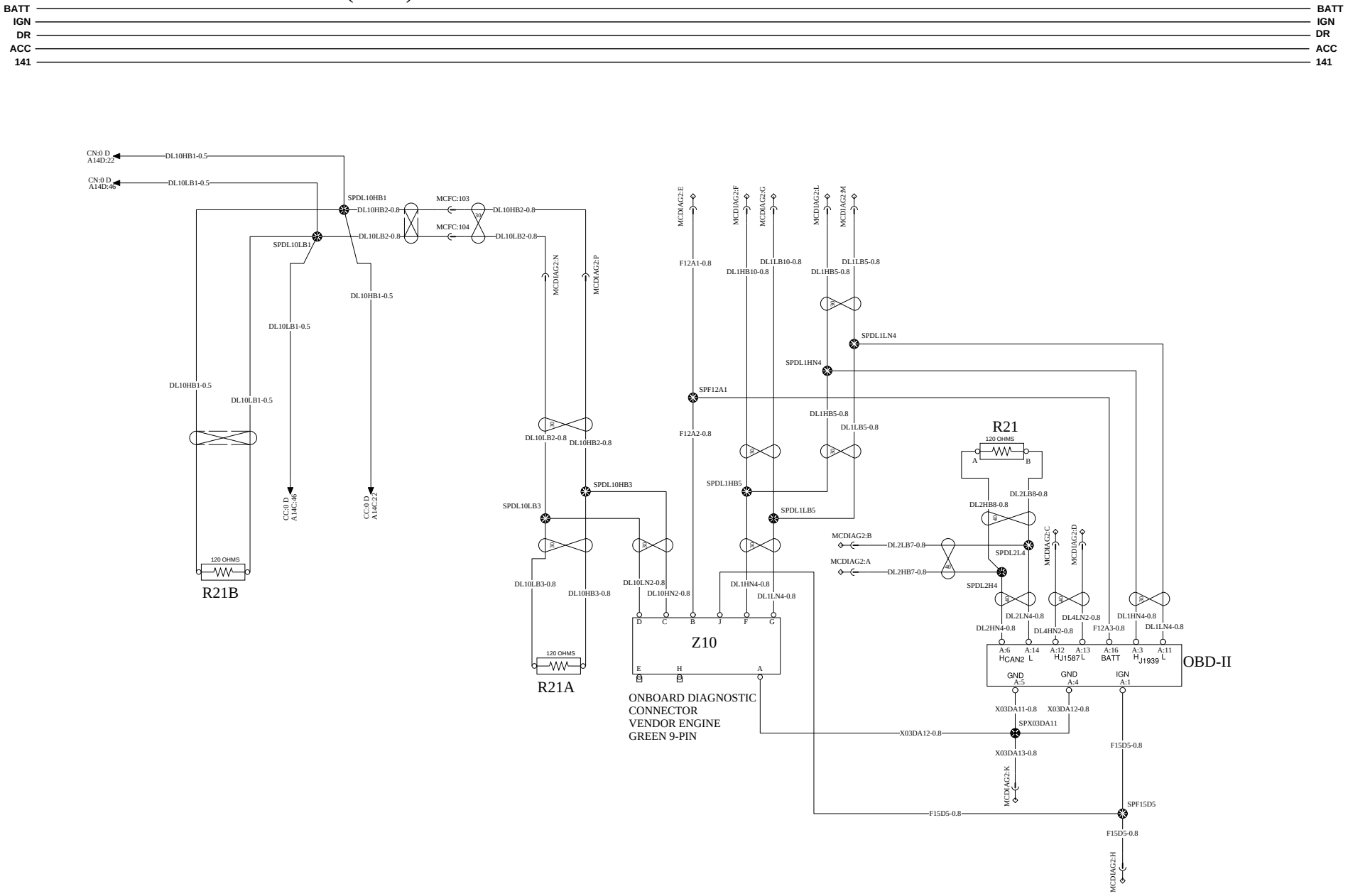

	Document title	Document No	Issue	Volume	Page
VOLVO Group Trucks Technology	12V SCHEMATIC VOLVO	21849527	08	1 (2)	108 (108)
	Document type: PRODUCT SCHEMATIC				

BILL OF MATERIALS INDEX (VOL 2)

NAME	PAGE
GROUNDS	2
FUSES AND CIRCUIT BREAKERS	3

NAME	PAGE
RELAYS	6
COMPONENTS	7

NAME	PAGE
INLINES	17
SPLICES	26

NAME	PAGE
SHELLS	29
REFERENCES	33

GROUNDS

NAME	PAGE
SKX03D	AE 3 C
SKX03D	BD 1 D
SKX03D	CM 0 D
SKX03D	GB 1 D
SKX03D	IB 1 D
SKX03F_A	AA 3 C
SKX03F_A	AB 0 E

NAME	PAGE
SKX03F_A	AE 3 B
SKX03F_A	DF 4 C
SKX03F_A	DP 2 D
SKX03F_A	EB 4 D
SKX03F_A	EH 4 D
SKX03F_A	GI 1 E
SKX03F_A	IA 4 C

NAME	PAGE
SKX03F_A	IB 2 D
SKX03F_A	IF 2 D
SKX03F_A	JG 2 D
SKX03F_A	JH 0 E
SKX03F_A	KE 0 C
SKX03F_A	KF 1 B
SKX03F_A	KG 0 B

NAME	PAGE
SKX03F_B	AE 4 B
SKX03F_B	BH 0 E
SKX03F_B	CH 2 D
SKX03F_B	FB 3 D
SKX03F_B	FC 0 E
SKX03F_B	FD 0 E
SKX03F_B	GK 2 C

NAME	PAGE
SKX03F_B	IC 1 E
X02	AE 2 C
X02	AL 1 C
X02	AN 1 C
X02	CC 4 B
X02	CL 3 B
X02	CN 4 B

NAME	PAGE
X02	HA 0 E
X03	AE 3 D
X03	AG 1 D
X03	AL 1 D
X03	AN 2 D
X03	CB 1 D
X07B	IG 3 C

NAME	PAGE
X07C	IG 4 C
X07D	HD 1 C
X07D	HE 1 C
X07D	HH 2 C
X07H	IG 3 C
X07K	IG 4 C
X45	CA 2 B

FUSES AND CIRCUIT BREAKERS

FUSE	DESCRIPTION	PAGE
F01 ()	DCP Power/ Power Mirror/ TGW	AB 2 D
F01 ()	DCP Power/ Power Mirror/ TGW	BJ 0 A
F01 ()	DCP Power/ Power Mirror/ TGW	IC 2 A
F02 ()	Radio/ Radio with Amplifier	AB 3 D
F02 ()	Radio/ Radio with Amplifier	BA 1 A
F02 ()	Radio/ Radio with Amplifier	KA 1 A
F02 ()	Radio/ Radio with Amplifier	KB 2 A
F02 ()	Radio/ Radio with Amplifier	KC 0 A
F02 ()	Radio/ Radio with Amplifier	KE 1 A
F02 ()	Radio/ Radio with Amplifier	KF 2 A
F02 ()	Radio/ Radio with Amplifier	KG 0 A
F03 ()	Driver Window, Heated mirrors	AB 3 D
F03 ()	Driver Window, Heated mirrors	IC 1 A
F04 ()	RH Window	AB 3 D
F04 ()	RH Window	IC 3 A
F05 ()	{ACC/APU Power}	AB 3 D
F08 ()	LCM1	AB 3 C
F08 ()	LCM1	GB 3 A
F09 ()	City Horn, Air Horn	AB 3 C
F09 ()	City Horn, Air Horn	GQ 1 A
F10 ()	LCM2	AB 3 C
F10 ()	LCM2	GB 3 B
F11 ()	Batt. Expansion/ Sec. Instrument	AB 3 C
F11 ()	Batt. Expansion/ Sec. Instrument	BD 2 A
F12 ()	Diagnostic Tool/ Road Relay	AB 4 C
F12 ()	Diagnostic Tool/ Road Relay	BC 1 A
F12 ()	Diagnostic Tool/ Road Relay	XA 4 A
F13 ()	TGW	AB 4 C
F13 ()	TGW	BJ 0 A
F14 ()	ECS/ Beacon Lamps	AB 4 C
F14 ()	ECS/ Beacon Lamps	EB 4 A
F14 ()	ECS/ Beacon Lamps	EH 4 A
F14 ()	ECS/ Beacon Lamps	GJ 1 A
F15 ()	Key Switch Bat	AB 1 B
F16 ()	LCM3	AB 1 B
F16 ()	LCM3	GB 3 A
F17 ()	LCM6	AB 2 B
F17 ()	LCM6	GB 3 A
F18 ()	LCM5	AB 2 B
F18 ()	LCM5	GB 3 B
F19 ()	I-Shift	AB 2 B
F19 ()	I-Shift	DA 0 A
F20 ()	Batt Cluster Radio,	AB 2 B
F20 ()	Batt Cluster Radio,	BA 0 A
F20 ()	Batt Cluster Radio,	KA 1 A
F20 ()	Batt Cluster Radio,	KB 3 A
F20 ()	Batt Cluster Radio,	KC 1 A
F20 ()	Batt Cluster Radio,	KE 1 A
F20 ()	Batt Cluster Radio,	KF 3 A
F20 ()	Batt Cluster Radio,	KG 1 A

FUSE	DESCRIPTION	PAGE
F21 ()	Cummins IGN	AB 0 E
F21 ()	Cummins IGN	CC 2 A
F21 ()	Cummins IGN	CL 1 A
F21 ()	Cummins IGN	CN 2 A
F22 ()	EFRC IGN	AB 0 E
F22 ()	EFRC IGN	AC 2 A
F23 ()	Climate Control Ign.	AB 0 E
F23 ()	Climate Control Ign.	HA 0 B
F25 ()	Heated Seats	AB 1 E
F25 ()	Heated Seats	IB 2 A
F26 ()	Wiper	AB 1 E
F26 ()	Wiper	GP 0 A
F27 ()	Interaxle/ Interwheel	AB 1 E
F27 ()	Interaxle/ Interwheel	FD 2 A
F28 ()	SRS	AB 1 E
F28 ()	SRS	JA 1 A
F29 ()	Camera Prep/ BB IGN-Z	AB 2 E
F29 ()	Camera Prep/ BB IGN-Z	BH 1 A
F30 ()	Snow Plow LPS LH	AB 2 E
F30 ()	Snow Plow LPS LH	GI 2 A
F31 ()	Touch Lock/ Heated Windshield	AB 2 E
F31 ()	Touch Lock/ Heated Windshield	FF 1 A
F31 ()	Touch Lock/ Heated Windshield	IB 3 A
F32 ()	Snow Plow LPS RH	AB 3 E
F32 ()	Snow Plow LPS RH	GI 1 A
F33 ()	Not Used	AB 3 E
F34 ()	PTO	AB 3 E
F34 ()	PTO	DP 2 A
F41 ()	Not Used	AA 4 D
F42 ()	12V Socket, Cooler, Sleeper	AA 0 D
F42 ()	12V Socket, Cooler, Sleeper	IG 3 A
F43 ()	Roof Sign/ Body Builder	AA 0 D
F43 ()	Roof Sign/ Body Builder	BH 0 A
F43 ()	Roof Sign/ Body Builder	GC 2 A
F44 ()	Not Used	AA 0 D
F45 ()	Auxiliary Switches 3 / 4	AA 0 D
F45 ()	Auxiliary Switches 3 / 4	NA 3 A
F46 ()	LECM1 Fuses FB1, FB2, FB7	AA 1 D
F46 ()	LECM1 Fuses FB1, FB2, FB7	HB 2 A
F47 ()	LECM4 Fuses FB3, FB5, FB9, FB10	AA 1 D
F47 ()	LECM4 Fuses FB3, FB5, FB9, FB10	HB 3 A
F48 ()	LECM3 HVAC Fan	AA 1 D
F48 ()	LECM3 HVAC Fan	HB 3 A
F49 ()	LCM4	AA 0 B
F49 ()	LCM4	GB 3 B
F50 ()	LECM2 Fuses FB6, FB8	AA 0 B
F50 ()	LECM2 Fuses FB6, FB8	HB 2 A
F51 ()	Climate Control, AC Blower Batt.	AA 0 B
F51 ()	Climate Control, AC Blower Batt.	HA 0 A
F52 ()	LVD Sense/ Qualcomm/ Mobile Max 2	AA 0 B

FUSES AND CIRCUIT BREAKERS

FUSE	DESCRIPTION	PAGE
F52 ()	LVD Sense/ Qualcomm/ Mobile Max 2	BE 2 A
F52 ()	LVD Sense/ Qualcomm/ Mobile Max 2	BG 0 A
F53 ()	Central Locks Batt.	AA 1 B
F53 ()	Central Locks Batt.	IF 2 A
F54 ()	ABS 1.	AA 1 B
F54 ()	ABS 1.	EA 2 A
F54 ()	ABS 1.	EC 2 A
F54 ()	ABS 1.	EG 2 A
F55 ()	FUSE, BENDIX FUSION	AA 1 B
F55 ()	FUSE, BENDIX FUSION	JH 0 A
F56 ()	FUSE, METHANE DETECT	AA 2 E
F56 ()	FUSE, METHANE DETECT	CM 0 A
F57 ()	LDWS	AA 3 E
F57 ()	LDWS	JG 2 A
F57 ()	LDWS	JH 0 A
F58 ()	LCM/LCP IGN./ Central Locks/ IGN.	AA 3 E
F58 ()	LCM/LCP IGN./ Central Locks/ IGN.	GA 1 A
F59 ()	Volvo Link/ QualComm IGN./Mobile Max 2	AA 3 E
F59 ()	Volvo Link/ QualComm IGN./Mobile Max 2	BE 2 A
F59 ()	Volvo Link/ QualComm IGN./Mobile Max 2	BG 0 A
F60 ()	LECM IGN.	AA 3 E
F60 ()	LECM IGN.	HB 3 A
F61 ()	Road Relay Ign.	AA 4 E
F61 ()	Road Relay Ign.	BC 1 A
F62 ()	BACKUP LAMPS	AA 4 E
F62 ()	BACKUP LAMPS	GK 3 A
F63 ()	Lift Axle/ BB Reverse/ Susp. Dump/ Fifth	AA 3 D
F63 ()	Lift Axle/ BB Reverse/ Susp. Dump/ Fifth	FC 1 A
F64 ()	BB IGN-Y	AA 3 D
F64 ()	BB IGN-Y	BH 1 A
F65 ()	BB IGN-X	AA 3 D
F65 ()	BB IGN-X	BH 0 A
F66 ()	IGN. EXP/ Sec. Instrument	AA 3 D
F66 ()	IGN. EXP/ Sec. Instrument	BD 2 A
F67 ()	VORAD/ ECS/ACC	AA 4 D
F67 ()	VORAD/ ECS/ACC	EB 3 A
F67 ()	VORAD/ ECS/ACC	EH 3 A
F67 ()	VORAD/ ECS/ACC	JE 0 A
F68 ()	I SHIFT GECU	AA 4 D
F68 ()	I SHIFT GECU	DA 1 B
F69 ()	ISHIFT TECU	AA 4 D
F69 ()	ISHIFT TECU	DA 0 B
F77 ()	12V Power Outlets, Dash	AA 0 D
F77 ()	12V Power Outlets, Dash	IG 0 A
F78 ()	Dome/ Door Lamps	AA 1 D
F78 ()	Dome/ Door Lamps	IA 2 A
F79 ()	CB Power Studs	AA 1 D
F79 ()	CB Power Studs	IG 2 A
F80 ()	12V Socket, D.S. Cab, Sleeper	AA 1 D
F80 ()	12V Socket, D.S. Cab, Sleeper	IG 4 A

FUSE	DESCRIPTION	PAGE
F81 ()	Auxiliary Switches 1 / 2	AA 1 D
F81 ()	Auxiliary Switches 1 / 2	NA 1 A
F82 ()	12V Power Overhead	AA 2 D
F82 ()	12V Power Overhead	IG 2 A
F90 ()	FUSE SINK PUMP	HE 0 C
F90 ()	FUSE SINK PUMP	HH 0 C
FE1 ()	TRAILER STOP RELAY	AC 0 B
FE1 ()	TRAILER STOP RELAY	MA 1 A
FE2 ()	RELAY TRAILER CLEARANCE	AC 1 B
FE2 ()	RELAY TRAILER CLEARANCE	MA 1 A
FE3 ()	RELAY TRAILER MARKER	AC 1 B
FE3 ()	RELAY TRAILER MARKER	MA 2 A
FE4 ()	EMS MAIN VOLVO/ CUMMINS	AC 2 C
FE4 ()	EMS MAIN VOLVO/ CUMMINS	AG 2 A
FE5 ()	ACM EMS	AC 2 C
FE5 ()	ACM EMS	AG 3 A
FE5 ()	ACM EMS	BP 2 A
FE6 ()	VECU/ WATER IN FUEL SW/ ENG. BRAKE	AC 2 C
FE6 ()	VECU/ WATER IN FUEL SW/ ENG. BRAKE	AG 0 A
FE7 ()	BODY BUILDER MODULE	AC 2 C
FE7 ()	BODY BUILDER MODULE	AG 0 A
FE8 ()	EMS COM 1	AC 3 C
FE8 ()	EMS COM 1	AG 3 A
FE8 ()	EMS COM 1	CL 3 A
FE9 ()	EMS COMP 2	AC 3 C
FE9 ()	EMS COMP 2	AG 4 A
FE9 ()	EMS COMP 2	CL 3 A
FE10 ()	TRAILER AUX/ABS	AC 3 C
FE10 ()	TRAILER AUX/ABS	MA 3 A
FE11 ()	ABS IGN	AC 3 C
FE11 ()	ABS IGN	EA 2 A
FE11 ()	ABS IGN	EC 2 A
FE11 ()	ABS IGN	EG 2 A
FE12 ()	FUEL HEAT	AC 3 C
FE12 ()	FUEL HEAT	CE 2 A
FE13 ()	AIR DRYER	AC 4 C
FE13 ()	AIR DRYER	FA 2 A
FE14 ()	TPM	AC 4 C
FE14 ()	TPM	FG 0 A
FE15 ()	LNG FAN	AC 4 C
FE16 ()	FAN FUEL COOLER	AC 4 C
FE17 ()	CES/ SPARE	AD 0 B
FE17 ()	CES/ SPARE	CP 3 A
FE18 ()	CUMMINS ISX/ ISX-G	AD 0 B
FE18 ()	CUMMINS ISX/ ISX-G	CC 1 A
FE18 ()	CUMMINS ISX/ ISX-G	CL 3 A
FE18 ()	CUMMINS ISX/ ISX-G	CN 1 A
FE19 ()	AUTO TRANS: ALLISON/ EATON	AD 1 B
FE19 ()	AUTO TRANS: ALLISON/ EATON	DB 4 A
FE19 ()	AUTO TRANS: ALLISON/ EATON	DF 0 A

FUSES AND CIRCUIT BREAKERS

FUSE	DESCRIPTION	PAGE
FE20 ()	TRAILER LEFT TURN	AD 1 B
FE20 ()	TRAILER LEFT TURN	MA 3 B
FE21 ()	TRAILER RIGHT TURN	AD 1 B
FE21 ()	TRAILER RIGHT TURN	MA 3 B
FE22 ()	FUSE CUMMINS ICM	AD 1 B
FE23 ()	SPARE	AD 2 B
FE24 ()	FUSE CUMMINS MAF	AD 2 B
FE25 ()	UREA HEATED LINES	AD 0 B
FE25 ()	UREA HEATED LINES	CD 1 A

FUSE	DESCRIPTION	PAGE
FE25 ()	UREA HEATED LINES	CP 1 A
FM08A (5 AMP FUSE)	TRUCK BATT TO BATT MONITOR FUSE	HJ 3 D
FT01 ()	FUSE ACM	CK 0 B
FT02A ()	FUSE, CLUTCH, POWER	DB 0 D
FT03 ()	FUSE DISCONNECT SWITCH	AM 3 D
FT04 ()	FUSE DISCONNECT SOLENOID	AM 2 D
FT05 ()	FUSE DCU	CC 3 B
FT05 ()	FUSE DCU	CN 3 B

RELAYS

RELAY	DESCRIPTION	PAGE
RLY02	RELAY, POWER ACCESSORIES	AB 2 D
RLY03	RELAY DOOR ALARM	IA 3 C
RLY04	RELAY PARK BRAKE ALARM	IA 4 C
RLY05	RELAY, POWER IGNITION 1	AB 1 D
RLY06	RELAY RADIO WAKE	KE 0 B
RLY06	RELAY RADIO WAKE	KF 2 B
RLY06	RELAY RADIO WAKE	KG 0 B
RLY07	RELAY, PTO	DP 1 B
RLY08	RELAY, POWER IGNITION 2	AA 2 C
RLY10	RELAY, CITY HORN	GQ 1 C
RLY11	RELAY, DOME/ DOOR LAMPS	IA 2 C
RLY12	RELAY, INTERMITTENT WIPER	GP 0 B
RLY13	RELAY, AUTOSHIFT	DB 2 B
RLY13_1	RELAY, START ENABLE	DF 2 B
RLY13_3	RELAY NEUTRAL START I-SHIFT	AI 2 D
RLY14	Relay Lift Axle/ Reverse	FB 3 B

RELAY	DESCRIPTION	PAGE
RLY14	Relay Lift Axle/ Reverse	GK 1 B
RLY15	RELAY REMOTE START ENABLE	BM 4 B
RLY16	RELAY, BODY BUILDER REMOTE THROTTLE INC	AH 2 C
RLY17	RELAY, BODY BUILDER REMOTE THROTTLE DE	AH 3 B
RLY23	RELAY, ER2 ALLISON BODY BUILDER	DF 4 B
RLY24	RELAY, ER1 ALLISON BODY BUILDER	DF 3 B
RLY26	SNOWPLOW LH ER4	GI 2 C
RLY27	SNOWPLOW RH ER9	GI 1 C
RLY28	SNOWPLOW LCM INPUT ER7	GI 3 C
RLY33B	RELAY, ER3 I-SHIFT POWER	DA 1 B
RLY34	RELAY, ER4 ECS POWER	EB 4 B
RLY34	RELAY, ER4 ECS POWER	EH 4 B
RLY38	RELAY, ROOF MARKER LAMPS, ER1	GC 2 B
RLY41	RELAY, PARK BRAKE	HB 4 C
RLYER5	RELAY, METHANE DETECT	CM 0 C
RLYER6	RELAY METHANE DETECTOR	CM 0 B

COMPONENTS

COMPONENT	DESCRIPTION	PAGE
		AB 3 E
		DA 1 A
		DB 3 A
		DF 1 A
A03A	INSTRUMENT CLUSTER A	BA 0 D
A03B	INSTRUMENT CLUSTER B	BA 2 C
A03C	INSTRUMENT CLUSTER C	BB 0 C
A03S	SECONDARY GAUGES	BD 1 B
A04	REFRIGERATOR	HD 1 B
A04	REFRIGERATOR	HE 1 C
A04	REFRIGERATOR	HH 1 C
A04A	REFRIGERATOR	HE 1 D
A04A	REFRIGERATOR	HH 1 D
A07A	RADIO	BC 4 B
A07A	RADIO	KA 0 C
A07A	RADIO	KB 2 C
A07A	RADIO	KC 0 B
A07A	RADIO	KD 1 B
A07A	RADIO	XC 4 D
A12A	CONTROL UNIT, ABS (ANTI-LOCK BRAKE SYSTEM	EA 0 C
A12B	CONTROL UNIT, ABS (ANTI-LOCK BRAKE SYSTEM	EC 0 C
A12B	CONTROL UNIT, ABS (ANTI-LOCK BRAKE SYSTEM	ED 0 A
A12B	CONTROL UNIT, ABS (ANTI-LOCK BRAKE SYSTEM	EG 0 C
A13B	TECU AMT-F	DA 3 D
A13E	Control unit, TECU (automatic transmissio	DA 2 B
A14C	CONTROL UNIT EMS CUMMINS ISX '16	CC 0 D
A14C	CONTROL UNIT EMS CUMMINS ISX '16	CD 0 E
A14D	CONTROL UNIT EMS CUMMINS ISX '17	CN 0 D
A14D	CONTROL UNIT EMS CUMMINS ISX '17	CP 0 E
A15	Control unit, SRS (Supplementary Restra	JA 1 C
A16	Control unit, ECS (Electronic Controlled	EB 0 C
A16	Control unit, ECS (Electronic Controlled	EH 0 C
A17	Control unit, VECU (Vehicle ECU)	AG 1 C
A17	Control unit, VECU (Vehicle ECU)	AH 0 D
A17	Control unit, VECU (Vehicle ECU)	AI 0 A
A17	Control unit, VECU (Vehicle ECU)	AJ 1 C
A19E	SHIFT SELECTOR ALLISON	DF 0 E
A27	LIGHT CONTROL MODULE	GA 4 C
A27	LIGHT CONTROL MODULE	GB 1 C
A27	LIGHT CONTROL MODULE	GG 0 A
A27	LIGHT CONTROL MODULE	GK 0 A
A27	LIGHT CONTROL MODULE	IE 2 A
A34	CONTROL UNIT, CLIMATE	HA 2 B
A36	Control unit, BBM (Body Builder Module)	BI 0 C
A36	Control unit, BBM (Body Builder Module)	BM 0 C
A38	Control unit, FMS, satellite communicati	BE 0 C
A38A	CONTROL UNIT, MOBILE MAX II	BG 0 C
A46	Control unit, LECM (Living Enviroment Co	HB 4 B
A46	Control unit, LECM (Living Enviroment Co	HD 3 A
A46	Control unit, LECM (Living Enviroment Co	HE 3 A

COMPONENT	DESCRIPTION	PAGE
A46	Control unit, LECM (Living Enviroment Co	HH 3 A
A46	Control unit, LECM (Living Enviroment Co	XC 2 B
A48	TV	KC 0 C
A48	TV	KG 0 C
A51	DISPLAY, SIDE SENSOR	JF 2 C
A55A	EATON AUTO/ULTRA SHIFT GEN 3 ECU	DB 1 D
A56	STEREO AMPLIFIER	KC 0 C
A56	STEREO AMPLIFIER	KG 0 C
A57A	CONTROL UNIT ALLISON TRANS. GEN 4	DE 0 A
A57A	CONTROL UNIT ALLISON TRANS. GEN 4	DF 0 C
A58A	ALLISON TRANSMISSION	DE 0 D
A60	CONTROL UNIT LANE DEPARTURE WARNING SYSTE	JG 1 B
A61A	BATTERY MONITOR, MIDTRONICS	HJ 4 D
A70A	PUSH BUTTON SHIFT CONTROL	DB 0 C
A72	LOW VOLTAGE DISCONNECT	AA 2 C
A72	LOW VOLTAGE DISCONNECT	HB 2 D
A80	Airdryer, electronical controlled	FA 1 C
A102A	CONTROL UNIT, GPS RECEIVER TELEMATICS GAT	BJ 2 D
A109	Control unit, GSECU (Gearshift ECU)	DA 1 C
A131A	LVD, POWER SEPARATOR	HJ 4 B
A132	CONTROL UNIT TIRE PRESSURE MONITORING	FG 0 C
A132B	TPM MODULE	FG 2 C
A137	DEF CONTROL MODULE,	CK 0 C
A138	PUMP UNIT, ADBLUE	CK 1 E
A138A	PUMP UNIT, ADBLUE (CUMMINS)	CC 1 C
A147	Control Unit, Fuel Filter Module	BP 2 D
A148	Control Unit, Heated Windshield	IB 3 C
A158	Control unit, Audio	KD 3 C
A158	Control unit, Audio	KE 1 C
A158	Control unit, Audio	KF 2 C
A158	Control unit, Audio	KG 1 B
A158	Control unit, Audio	KH 1 C
A158A	CONTROL UNIT, AUDIO INFOTAINMENT	XC 0 B
A170	Control panel, climate	HJ 0 B
A186	Control Unit, PCCU (Parking Cooler Contro	HJ 0 C
A232	SYSTEM BENDIX FUSION	JH 2 B
B06	Sensor, air pressure, air tank	AI 1 C
B06A	SENSOR, AIR PRESSURE B-TANK / FRONT BRAK	BA 3 D
B06AP	SENSOR AIR PRESSURE BRAKE APPLICATION	BA 2 D
B06B	SENSOR, AIR PRESSURE A-TANK / REAR BRAK	BA 3 D
B07	SENSOR FUEL LEVEL	BA 3 D
B09	SENSOR OIL TEMP GEARBOX	BA 4 D
B13	SENSOR WHEEL SPEED LH 1ST AXLE	EA 1 B
B13	SENSOR WHEEL SPEED LH 1ST AXLE	EC 2 B
B13	SENSOR WHEEL SPEED LH 1ST AXLE	EG 2 B
B14	SENSOR WHEEL SPEED RH 1ST AXLE	EA 1 B
B14	SENSOR WHEEL SPEED RH 1ST AXLE	EC 1 B
B14	SENSOR WHEEL SPEED RH 1ST AXLE	EG 1 B
B15	SENSOR WHEEL SPEED LH 2ND AXLE	EA 0 D
B15	SENSOR WHEEL SPEED LH 2ND AXLE	EC 0 B

COMPONENTS

COMPONENT	DESCRIPTION	PAGE
B15	SENSOR WHEEL SPEED LH 2ND AXLE	EG 0 B
B16	SENSOR, WHEEL SPEED RH 2ND AXLE	EA 1 D
B16	SENSOR, WHEEL SPEED RH 2ND AXLE	EC 4 D
B16	SENSOR, WHEEL SPEED RH 2ND AXLE	EG 4 D
B17	SENSOR, WHEEL SPEED LH 3RD AXLE	EA 2 D
B17	SENSOR, WHEEL SPEED LH 3RD AXLE	EC 1 D
B17	SENSOR, WHEEL SPEED LH 3RD AXLE	EG 1 D
B18	SENSOR WHEEL SPEED RH 3RD AXLE	EA 3 D
B18	SENSOR WHEEL SPEED RH 3RD AXLE	EC 2 D
B18	SENSOR WHEEL SPEED RH 3RD AXLE	EG 2 D
B22A	SENSOR AMBIENT AIR TEMP.	BA 3 A
B22A_S	AMBIENT TEMP SERVICE	BA 4 A
B22B	SENSOR AMBIENT AIR TEMP.	BA 3 A
B22C	SENSOR, AMBIENT AIR TEMP	CC 3 D
B22C	SENSOR, AMBIENT AIR TEMP	CN 3 D
B25	SENSOR ACCELERATOR PEDAL	AI 1 D
B25A	SENSOR ACCELERATOR PEDAL	AI 4 E
B30A	SENSOR, CHASSIS LEVEL DRIVE AXLE	EB 2 E
B30A	SENSOR, CHASSIS LEVEL DRIVE AXLE	EH 2 E
B38RC	SENSOR OIL TEMP REAR CENTER AXLE	BB 3 D
B38RF	SENSOR OIL TEMP REAR FRONT AXLE	BB 3 D
B38RR	SENSOR OIL TEMP REAR REAR AXLE	BB 4 D
B39	SENSOR AIR RESTRICTION	BB 0 B
B49	SENSOR, STEERING ANGLE	ED 1 D
B50	SENSOR, YAW-RATE ESP	ED 2 D
B55A	SENSOR, AIR PRESSURE, SUSPENSION BELLOWS,	EB 0 D
B55A	SENSOR, AIR PRESSURE, SUSPENSION BELLOWS,	EH 0 D
B55B	SENSOR, AIR PRESSURE , SUSPENSION BELLOWS	EH 1 D
B56	Sensor, air pressure, suspension bellows	BA 3 B
B58A	SENSOR, AIR PRESSURE, SUSPENSION BELLOWS,	EB 1 D
B58A	SENSOR, AIR PRESSURE, SUSPENSION BELLOWS,	EH 1 D
B58R	SENSOR AIR PRESSURE REAR SUSPENSION	BA 2 D
B59	Sensor, Indoor Temp.	HA 2 B
B60A	SPEAKER LEFT DASH	KA 2 E
B60A	SPEAKER LEFT DASH	KB 3 E
B60A	SPEAKER LEFT DASH	KC 1 E
B60A	SPEAKER LEFT DASH	KE 2 E
B60A	SPEAKER LEFT DASH	KF 3 E
B60A	SPEAKER LEFT DASH	KG 1 E
B60B	SPEAKER RIGHT DASH	KA 2 E
B60B	SPEAKER RIGHT DASH	KB 2 E
B60B	SPEAKER RIGHT DASH	KC 2 E
B60B	SPEAKER RIGHT DASH	KE 2 E
B60B	SPEAKER RIGHT DASH	KF 2 E
B60B	SPEAKER RIGHT DASH	KG 2 E
B60C	SPEAKER LEFT DOOR	KA 1 E
B60C	SPEAKER LEFT DOOR	KB 4 E
B60C	SPEAKER LEFT DOOR	KC 0 E
B60C	SPEAKER LEFT DOOR	KE 1 E
B60C	SPEAKER LEFT DOOR	KF 4 E

COMPONENT	DESCRIPTION	PAGE
B60C	SPEAKER LEFT DOOR	KG 0 E
B60D	SPEAKER RIGHT DOOR	KA 1 E
B60D	SPEAKER RIGHT DOOR	KB 2 E
B60D	SPEAKER RIGHT DOOR	KC 0 E
B60D	SPEAKER RIGHT DOOR	KE 1 E
B60D	SPEAKER RIGHT DOOR	KF 2 E
B60D	SPEAKER RIGHT DOOR	KG 0 E
B60E	SPEAKER LEFT UPPER	KB 0 D
B60E	SPEAKER LEFT UPPER	KF 0 D
B60F	SPEAKER RIGHT UPPER	KB 0 D
B60F	SPEAKER RIGHT UPPER	KF 0 D
B60G	SPEAKER LEFT LOWER	KC 2 D
B60G	SPEAKER LEFT LOWER	KG 2 D
B60G_1	SPEAKER LEFT LOWER	KG 2 E
B60H	SPEAKER RIGHT LOWER	KC 2 D
B60H	SPEAKER RIGHT LOWER	KG 2 D
B60H_1	SPEAKER RIGHT LOWER	KG 2 E
B60I	SPEAKER SUBWOOFER	KC 2 D
B60I	SPEAKER SUBWOOFER	KG 3 E
B60J	SPEAKER LEFT UPPER	KB 1 E
B60J	SPEAKER LEFT UPPER	KF 1 E
B60K	SPEAKER RIGHT UPPER	KB 1 E
B60K	SPEAKER RIGHT UPPER	KF 1 E
B60L_H2	SPEAKER, LEFT REAR	KB 1 B
B60L_H2	SPEAKER, LEFT REAR	KF 1 B
B60L_H4	SPEAKER, LEFT REAR	KB 1 C
B60L_H4	SPEAKER, LEFT REAR	KF 1 C
B60M_H2	SPEAKER, RIGHT REAR	KB 0 B
B60M_H2	SPEAKER, RIGHT REAR	KF 0 B
B60M_H4	SPEAKER, RIGHT REAR	KB 0 C
B60M_H4	SPEAKER, RIGHT REAR	KF 0 C
B60N	SPEAKER, LEFT UPPER	KC 4 D
B60N	SPEAKER, LEFT UPPER	KG 4 D
B60P	SPEAKER, RIGHT UPPER	KC 4 D
B60P	SPEAKER, RIGHT UPPER	KG 4 D
B60R	SPEAKER LEFT UPPER	KC 4 B
B60R	SPEAKER LEFT UPPER	KG 4 B
B60S	SPEAKER RIGHT UPPER	KC 4 B
B60S	SPEAKER RIGHT UPPER	KG 4 B
B61A	TWEETER LEFT DASH	KA 2 E
B61A	TWEETER LEFT DASH	KB 3 E
B61A	TWEETER LEFT DASH	KC 0 E
B61A	TWEETER LEFT DASH	KE 2 E
B61A	TWEETER LEFT DASH	KF 3 E
B61A	TWEETER LEFT DASH	KG 0 E
B61B	TWEETER RIGHT DASH	KA 1 E
B61B	TWEETER RIGHT DASH	KB 2 E
B61B	TWEETER RIGHT DASH	KC 1 E
B61B	TWEETER RIGHT DASH	KE 1 E
B61B	TWEETER RIGHT DASH	KF 2 E

COMPONENTS

COMPONENT	DESCRIPTION	PAGE
B61B	TWEETER RIGHT DASH	KG 1 E
B62	Socket, TV Headphone	KC 0 C
B62	Socket, TV Headphone	KG 0 C
B63	Microphone, (handsfree)	KD 2 B
B64A	SPEAKER BENDIX FUSION LEFT DASH	JH 4 D
B64B	SPEAKER BENDIX FUSION RIGHT DASH	JH 4 D
B68	Sensor, output shaft speed, gearbox	AI 0 D
B68	Sensor, output shaft speed, gearbox	CC 2 C
B68	Sensor, output shaft speed, gearbox	CL 1 B
B68	Sensor, output shaft speed, gearbox	CN 2 C
B68_B	Sensor, output shaft speed, gearbox	AI 1 E
B78	SIDE SENSOR	JF 1 C
B80	SENSOR, ETHER START	CA 1 B
B82A	SENSOR, ACC RADAR FLR-20	JE 0 D
B96	Sensor, NOx	CK 3 B
B96B	Sensor, NOx	CK 2 B
B105A	SENSOR, RETARDER TEMP	DE 3 D
B121	Sensor, Low level washer fluid	GP 3 B
B122A	SENSOR EXHAUST TEMP. CATALYST	CL 2 E
B122B	SENSOR CATALYST OUTLET TEMP. 2	CL 2 B
B123	SENSOR LOW COOLANT	CB 2 D
B123A	SENSOR, LOW COOLANT	CB 3 D
B123A	SENSOR, LOW COOLANT	CL 2 E
B123B	SENSOR, LOW COOLANT	CC 1 C
B123B	SENSOR, LOW COOLANT	CN 1 C
B142B	Sensor, AdBlue level and temperature	CC 3 C
B142C	Sensor, AdBlue level and temperature	CD 3 B
B142C	Sensor, AdBlue level and temperature	CK 1 B
B142C	Sensor, AdBlue level and temperature	CP 3 A
B152	SENSOR, BRAKE AIRPRESSURE, FRONT	ED 2 C
B153	SENSOR, BRAKE AIRPRESSURE, REAR	ED 3 C
B177	SENSOR AIR PRESSURE, SUSPENSION BELLOWS,	ED 3 B
B185A	SENSOR OXYGEN OUTLET EGO	CL 1 D
B300B	METHANE SENSOR ENGINE	CM 3 D
B300C	METHANE SENSOR SLEEPER	CM 2 D
B310	Sensor, Particulate Matter	CK 2 B
B319	SENSOR ALARM CO	CM 1 D
B319_B	SENSOR ALARM CO SLEEPER	CM 2 D
E05A	5TH WHEEL LAMP	GG 1 C
E05A	5TH WHEEL LAMP	GH 1 C
E05B	5TH WHEEL LAMP, HIGH	GG 2 C
E05B	5TH WHEEL LAMP, HIGH	GH 0 C
E05C	5TH WHEEL LAMP,DUAL	GG 2 C
E05C	5TH WHEEL LAMP,DUAL	GH 1 C
E05D	5TH WHEEL LAMP,DUAL	GG 3 C
E05D	5TH WHEEL LAMP,DUAL	GH 0 C
E05E	BACK OF CAB LAMP, D.S.	GG 3 C
E05E	BACK OF CAB LAMP, D.S.	GH 1 C
E05F	BACK OF CAB LAMP, P.S.	GG 3 C
E05F	BACK OF CAB LAMP, P.S.	GH 2 C

COMPONENT	DESCRIPTION	PAGE
E05K	5TH WHEEL LAMP	GG 2 C
E06	LAMP BACKUP	GK 1 E
E06LED	LAMP LED BACKUP	GK 1 E
E07L	Lamp, Fog Light	GE 2 C
E07R	Lamp, Fog Light	GE 3 C
E08L	Lamp, Driving Light	GE 3 C
E08R	Lamp, Driving Light	GE 3 C
E10	LAMP, TAIL LIGHT	GF 3 B
E10L	LAMP TAIL LIGHT LEFT	GF 3 D
E10LA	LAMP TAIL LIGHT LEFT	GF 0 C
E10R	LAMP TAIL LIGHT RIGHT	GF 4 D
E10RA	LAMP TAIL LIGHT RIGHT	GF 1 C
E11L	Lamp, Side Repeater	GA 1 D
E11L	Lamp, Side Repeater	IE 2 C
E11R	Lamp, Side Repeater	GA 2 D
E11R	Lamp, Side Repeater	IE 2 C
E12A	LAMP, MARKER	GC 1 D
E12B	LAMP, MARKER	GC 1 D
E12C	LAMP, MARKER	GC 2 D
E12D	LAMP, MARKER	GC 2 D
E12E	LAMP, MARKER	GC 2 D
E13L	Lamp, Park/Turn	GD 1 C
E13R	Lamp, Park/Turn	GD 1 C
E14L	WARNING LAMP SNOWPLOW	GJ 1 D
E14R	WARNING LAMP SNOWPLOW	GJ 1 D
E16L	Lamp, Door instep light, left	IA 1 D
E16R	Lamp, Door instep light, right	IA 1 D
E17C	Lamp Flourescent	HE 3 D
E17C	Lamp Flourescent	HH 4 B
E17C_H2	LAMP, FLOURESCENT	HD 3 C
E17C_H4	LAMP, FLOURESCENT	HD 3 C
E17D	LAMP, WORKCENTRE FLUORESCENT	HE 4 C
E17L	LAMP, FRONT OVRHEAD LEFT	IA 0 D
E17L2	LAMP, OVERHEAD	IA 1 B
E17R	LAMP, FRONT OVRHEAD RIGHT	IA 0 D
E18A	LAMP, LOWER D.S.	HD 4 D
E18B	LAMP, UNDER CABINET D.S.	HD 4 C
E18C	LAMP, UPPER D.S.	HE 2 B
E18C	LAMP, UPPER D.S.	HH 2 C
E18D	LAMP, UPPER P.S.	HE 2 B
E18E	LAMP, LOWER D.S.	HE 2 C
E18F	LAMP, LOWER P.S.	HE 3 C
E18G	LAMP, UPPER P.S.	HD 2 C
E18H	LAMP, UPPER D.S.	HD 2 C
E18J	LAMP, LOWER D.S.	HD 3 D
E18K	LAMP, TABLE	HD 3 D
E18L	LAMP, UNDER CABINET D.S.	HH 3 B
E18M	LAMP, UPPER D.S.	HD 1 C
E18N	LAMP, CENTER	HH 2 B
E18P	LAMP, LOWER D.S.	HH 3 C

COMPONENTS

COMPONENT	DESCRIPTION	PAGE
E18R	LAMP, LOWER P.S.	HH 3 B
E20A	Lamp Ashtray Illumination	IG 1 C
E22A	LAMP, ROOF SIGN ILLUMINATION	GC 0 D
E22B	LAMP, ROOF SIGN ILLUMINATION	GC 0 D
E22C	LAMP, ROOF SIGN ILLUMINATION	GC 0 D
E23A	LAMP, LUGGAGE D.S.	HD 2 B
E23B	LAMP, LUGGAGE P.S.	HD 2 B
E26L	Lamp, Headlamp Module	GD 2 B
E26L_1	Lamp, Headlamp Module	GD 3 D
E26R	Lamp, Headlamp Module	GD 3 B
E26R_1	Lamp, Headlamp Module	GD 3 D
E28	Parking heater, ADR	HB 4 D
E28A	PARK HEATER AUX AC	HJ 0 C
E30L	Lamp, Headlamp	GD 0 C
E30R	Lamp, Headlamp	GD 2 C
E32	HVAC UNIT	HB 3 D
E32A	HVAC UNIT	HA 2 D
E36A	LAMP, SUNVISOR	GC 3 D
E36B	LAMP, SUNVISOR	GC 3 D
E36C	LAMP, SUNVISOR	GC 3 D
E36D	LAMP, SUNVISOR	GC 4 D
E36E	LAMP, SUNVISOR	GC 4 D
E37	Lamp, LECM panel	HE 1 B
E37	Lamp, LECM panel	HH 1 B
E39	LAMP, LICENSE PLATE ILLUMINATION	GF 2 C
E43L	Lamp, Driving/Fog	GE 1 C
E43R	Lamp, Driving/Fog	GE 2 C
E80L	Lamp, Additional module, left	BP 3 B
E81A	UNDER CAB EXT. LAMP	IH 1 C
E81B	UNDER CAB EXT. LAMP	IH 1 C
E81C	UNDER CAB EXT. LAMP	IH 1 C
E81D	UNDER CAB EXT. LAMP	IH 2 C
E81E	UNDER CAB EXT. LAMP	IH 2 C
E81F	UNDER CAB EXT. LAMP	IH 2 C
E81G	UNDER CAB EXT. LAMP	IH 3 C
E81H	UNDER CAB EXT. LAMP	IH 3 C
E81J	UNDER CAB EXT. LAMP	IH 3 C
EM01	CONNECOTR CUMMINS SCR	CD 2 D
EM02	CONNECTOR CROSSOVER CUMMINS	CD 3 C
EM03	CONNECTOR CUMMINS DPF	CD 4 D
EM04	SENSOR DEF QUAL. CUMMINS	CD 4 A
F01	DCP Power/ Power Mirror/ TGW	AB 2 D
F01	DCP Power/ Power Mirror/ TGW	BJ 0 A
F01	DCP Power/ Power Mirror/ TGW	IC 2 A
F02	Radio/ Radio with Amplifier	AB 3 D
F02	Radio/ Radio with Amplifier	BA 1 A
F02	Radio/ Radio with Amplifier	KA 1 A
F02	Radio/ Radio with Amplifier	KB 2 A
F02	Radio/ Radio with Amplifier	KC 0 A
F02	Radio/ Radio with Amplifier	KE 1 A

COMPONENT	DESCRIPTION	PAGE
F02	Radio/ Radio with Amplifier	KF 2 A
F02	Radio/ Radio with Amplifier	KG 0 A
F03	Driver Window, Heated mirrors	AB 3 D
F03	Driver Window, Heated mirrors	IC 1 A
F04	RH Window	AB 3 D
F04	RH Window	IC 3 A
F05	{ACC/APU Power}	AB 3 D
F08	LCM1	AB 3 C
F08	LCM1	GB 3 A
F09	City Horn, Air Horn	AB 3 C
F09	City Horn, Air Horn	GQ 1 A
F10	LCM2	AB 3 C
F10	LCM2	GB 3 B
F11	Batt. Expansion/ Sec. Instrument	AB 3 C
F11	Batt. Expansion/ Sec. Instrument	BD 2 A
F12	Diagnostic Tool/ Road Relay	AB 4 C
F12	Diagnostic Tool/ Road Relay	BC 1 A
F12	Diagnostic Tool/ Road Relay	XA 4 A
F13	TGW	AB 4 C
F13	TGW	BJ 0 A
F14	ECS/ Beacon Lamps	AB 4 C
F14	ECS/ Beacon Lamps	EB 4 A
F14	ECS/ Beacon Lamps	EH 4 A
F14	ECS/ Beacon Lamps	GJ 1 A
F15	Key Switch Bat	AB 1 B
F16	LCM3	AB 1 B
F16	LCM3	GB 3 A
F17	LCM6	AB 2 B
F17	LCM6	GB 3 A
F18	LCM5	AB 2 B
F18	LCM5	GB 3 B
F19	I-Shift	AB 2 B
F19	I-Shift	DA 0 A
F20	Batt Cluster Radio,	AB 2 B
F20	Batt Cluster Radio,	BA 0 A
F20	Batt Cluster Radio,	KA 1 A
F20	Batt Cluster Radio,	KB 3 A
F20	Batt Cluster Radio,	KC 1 A
F20	Batt Cluster Radio,	KE 1 A
F20	Batt Cluster Radio,	KF 3 A
F20	Batt Cluster Radio,	KG 1 A
F21	Cummins IGN	AB 0 E
F21	Cummins IGN	CC 2 A
F21	Cummins IGN	CL 1 A
F21	Cummins IGN	CN 2 A
F22	EFRC IGN	AB 0 E
F22	EFRC IGN	AC 2 A
F23	Climate Control Ign.	AB 0 E
F23	Climate Control Ign.	HA 0 B
F24	NOT USED	AB 1 E

COMPONENTS

COMPONENT	DESCRIPTION	PAGE
F25	Heated Seats	AB 1 E
F25	Heated Seats	IB 2 A
F26	Wiper	AB 1 E
F26	Wiper	GP 0 A
F27	Interaxle/ Interwheel	AB 1 E
F27	Interaxle/ Interwheel	FD 2 A
F28	SRS	AB 1 E
F28	SRS	JA 1 A
F29	Camera Prep/ BB IGN-Z	AB 2 E
F29	Camera Prep/ BB IGN-Z	BH 1 A
F30	Snow Plow LPS LH	AB 2 E
F30	Snow Plow LPS LH	GI 2 A
F31	Touch Lock/ Heated Windshield	AB 2 E
F31	Touch Lock/ Heated Windshield	FF 1 A
F31	Touch Lock/ Heated Windshield	IB 3 A
F32	Snow Plow LPS RH	AB 3 E
F32	Snow Plow LPS RH	GI 1 A
F33	Not Used	AB 3 E
F34	PTO	AB 3 E
F34	PTO	DP 2 A
F36	Not Used	AA 3 D
F37	NOT USED	AA 3 D
F38	Not Used	AA 4 D
F39	Not Used	AA 4 D
F40	Not Used	AA 4 D
F41	Not Used	AA 4 D
F42	12V Socket, Cooler, Sleeper	AA 0 D
F42	12V Socket, Cooler, Sleeper	IG 3 A
F43	Roof Sign/ Body Builder	AA 0 D
F43	Roof Sign/ Body Builder	BH 0 A
F43	Roof Sign/ Body Builder	GC 2 A
F44	Not Used	AA 0 D
F45	Auxiliary Switches 3 / 4	AA 0 D
F45	Auxiliary Switches 3 / 4	NA 3 A
F46	LECM1 Fuses FB1, FB2, FB7	AA 1 D
F46	LECM1 Fuses FB1, FB2, FB7	HB 2 A
F47	LECM4 Fuses FB3, FB5, FB9, FB10	AA 1 D
F47	LECM4 Fuses FB3, FB5, FB9, FB10	HB 3 A
F48	LECM3 HVAC Fan	AA 1 D
F48	LECM3 HVAC Fan	HB 3 A
F49	LCM4	AA 0 B
F49	LCM4	GB 3 B
F50	LECM2 Fuses FB6, FB8	AA 0 B
F50	LECM2 Fuses FB6, FB8	HB 2 A
F51	Climate Control, AC Blower Batt.	AA 0 B
F51	Climate Control, AC Blower Batt.	HA 0 A
F52	LVD Sense/ Qualcomm/ Mobile Max 2	AA 0 B
F52	LVD Sense/ Qualcomm/ Mobile Max 2	BE 2 A
F52	LVD Sense/ Qualcomm/ Mobile Max 2	BG 0 A
F53	Central Locks Batt.	AA 1 B

COMPONENT	DESCRIPTION	PAGE
F53	Central Locks Batt.	IF 2 A
F54	ABS 1.	AA 1 B
F54	ABS 1.	EA 2 A
F54	ABS 1.	EC 2 A
F54	ABS 1.	EG 2 A
F55	FUSE, BENDIX FUSION	AA 1 B
F55	FUSE, BENDIX FUSION	JH 0 A
F56	FUSE, METHANE DETECT	AA 2 E
F56	FUSE, METHANE DETECT	CM 0 A
F57	LDWS	AA 3 E
F57	LDWS	JG 2 A
F57	LDWS	JH 0 A
F58	LCM/LCP IGN./ Central Locks/ IGN.	AA 3 E
F58	LCM/LCP IGN./ Central Locks/ IGN.	GA 1 A
F59	Volvo Link/ QualComm IGN./Mobile Max 2	AA 3 E
F59	Volvo Link/ QualComm IGN./Mobile Max 2	BE 2 A
F59	Volvo Link/ QualComm IGN./Mobile Max 2	BG 0 A
F60	LECM IGN.	AA 3 E
F60	LECM IGN.	HB 3 A
F61	Road Relay Ign.	AA 4 E
F61	Road Relay Ign.	BC 1 A
F62	BACKUP LAMPS	AA 4 E
F62	BACKUP LAMPS	GK 3 A
F63	Lift Axle/ BB Reverse/ Susp. Dump/ Fifth	AA 3 D
F63	Lift Axle/ BB Reverse/ Susp. Dump/ Fifth	FC 1 A
F64	BB IGN-Y	AA 3 D
F64	BB IGN-Y	BH 1 A
F65	BB IGN-X	AA 3 D
F65	BB IGN-X	BH 0 A
F66	IGN. EXP/ Sec. Instrument	AA 3 D
F66	IGN. EXP/ Sec. Instrument	BD 2 A
F67	VORAD/ ECS/ACC	AA 4 D
F67	VORAD/ ECS/ACC	EB 3 A
F67	VORAD/ ECS/ACC	EH 3 A
F67	VORAD/ ECS/ACC	JE 0 A
F68	I SHIFT GECU	AA 4 D
F68	I SHIFT GECU	DA 1 B
F69	ISHIFT TECU	AA 4 D
F69	ISHIFT TECU	DA 0 B
F76	Not Used	AA 0 D
F77	12V Power Outlets, Dash	AA 0 D
F77	12V Power Outlets, Dash	IG 0 A
F78	Dome/ Door Lamps	AA 1 D
F78	Dome/ Door Lamps	IA 2 A
F79	CB Power Studs	AA 1 D
F79	CB Power Studs	IG 2 A
F80	12V Socket, D.S. Cab, Sleeper	AA 1 D
F80	12V Socket, D.S. Cab, Sleeper	IG 4 A
F81	Auxiliary Switches 1 / 2	AA 1 D
F81	Auxiliary Switches 1 / 2	NA 1 A

COMPONENTS

COMPONENT	DESCRIPTION	PAGE
F82	12V Power Overhead	AA 2 D
F82	12V Power Overhead	IG 2 A
F90	FUSE SINK PUMP	HE 0 C
F90	FUSE SINK PUMP	HH 0 C
FB03	FUSE, BAT. POWER OMNIVISION	BE 3 B
FB8	FUSE REMOTE SENSE ALT.	AM 4 C
FB08	FUSE METHANE DETECTION	CM 4 C
FB09	FUSE INVERTER	HI 1 B
FE1	TRAILER STOP RELAY	AC 0 B
FE1	TRAILER STOP RELAY	MA 1 A
FE2	RELAY TRAILER CLEARANCE	AC 1 B
FE2	RELAY TRAILER CLEARANCE	MA 1 A
FE3	RELAY TRAILER MARKER	AC 1 B
FE3	RELAY TRAILER MARKER	MA 2 A
FE4	EMS MAIN VOLVO/ CUMMINS	AC 2 C
FE4	EMS MAIN VOLVO/ CUMMINS	AG 2 A
FE5	ACM EMS	AC 2 C
FE5	ACM EMS	AG 3 A
FE5	ACM EMS	BP 2 A
FE6	VECU/ WATER IN FUEL SW/ ENG. BRAKE	AC 2 C
FE6	VECU/ WATER IN FUEL SW/ ENG. BRAKE	AG 0 A
FE7	BODY BUILDER MODULE	AC 2 C
FE7	BODY BUILDER MODULE	AG 0 A
FE8	EMS COM 1	AC 3 C
FE8	EMS COM 1	AG 3 A
FE8	EMS COM 1	CL 3 A
FE9	EMS COMP 2	AC 3 C
FE9	EMS COMP 2	AG 4 A
FE9	EMS COMP 2	CL 3 A
FE10	TRAILER AUX/ABS	AC 3 C
FE10	TRAILER AUX/ABS	MA 3 A
FE11	ABS IGN	AC 3 C
FE11	ABS IGN	EA 2 A
FE11	ABS IGN	EC 2 A
FE11	ABS IGN	EG 2 A
FE12	FUEL HEAT	AC 3 C
FE12	FUEL HEAT	CE 2 A
FE13	AIR DRYER	AC 4 C
FE13	AIR DRYER	FA 2 A
FE14	TPM	AC 4 C
FE14	TPM	FG 0 A
FE15	LNG FAN	AC 4 C
FE16	FAN FUEL COOLER	AC 4 C
FE17	CES/ SPARE	AD 0 B
FE17	CES/ SPARE	CP 3 A
FE18	CUMMINS ISX/ ISX-G	AD 0 B
FE18	CUMMINS ISX/ ISX-G	CC 1 A
FE18	CUMMINS ISX/ ISX-G	CL 3 A
FE18	CUMMINS ISX/ ISX-G	CN 1 A
FE19	AUTO TRANS: ALLISON/ EATON	AD 1 B

COMPONENT	DESCRIPTION	PAGE
FE19	AUTO TRANS: ALLISON/ EATON	DB 4 A
FE19	AUTO TRANS: ALLISON/ EATON	DF 0 A
FE20	TRAILER LEFT TURN	AD 1 B
FE20	TRAILER LEFT TURN	MA 3 B
FE21	TRAILER RIGHT TURN	AD 1 B
FE21	TRAILER RIGHT TURN	MA 3 B
FE22	FUSE CUMMINS ICM	AD 1 B
FE23	SPARE	AD 2 B
FE24	FUSE CUMMINS MAF	AD 2 B
FE25	UREA HEATED LINES	AD 0 B
FE25	UREA HEATED LINES	CD 1 A
FE25	UREA HEATED LINES	CP 1 A
FEM01	FUSE, MAIN POWER	AB 3 A
FEM02	FUSE, GROUND PROTECTION	AN 2 C
FEM03A	CIRCUIT BREAKER LIFT GATE	ND 3 D
FEM03B	CIRCUIT BREAKER LIFT GATE	ND 3 D
FM_A5	FUSE AUX AC	HJ 2 B
FT01	FUSE ACM	CK 0 B
FT02A	FUSE, CLUTCH, POWER	DB 0 D
FT03	FUSE DISCONNECT SWITCH	AM 3 D
FT04	FUSE DISCONNECT SOLENOID	AM 2 D
FT05	FUSE DCU	CC 3 B
FT05	FUSE DCU	CN 3 B
G01	BATTERY	AB 4 B
G01	BATTERY	AE 1 D
G01	BATTERY	AF 2 C
G01	BATTERY	AL 0 D
G01	BATTERY	AM 1 D
G01	BATTERY	AN 0 D
G01	BATTERY	CC 4 A
G01	BATTERY	CK 0 A
G01	BATTERY	CM 4 C
G01	BATTERY	CN 4 A
G01	BATTERY	DB 0 E
G01	BATTERY	HI 2 B
G01	BATTERY	HJ 4 D
G01	BATTERY	ND 3 D
G01B	Battery Ring Battery 2	BL 2 B
G01C	Battery Ring Battery 3	BL 1 C
G01D	Battery 4	BL 1 D
G01E	BATTERY 1	BL 1 B
G01F	AUX BATTERY	HJ 2 C
G02	ALTERNATOR	AE 2 A
G02	ALTERNATOR	AF 2 C
G02	ALTERNATOR	AL 1 A
G02	ALTERNATOR	AM 1 D
G02	ALTERNATOR	AN 1 A
G03H	INVERTER 12VDC/120VAC	HI 0 B
G03J	INVERTER DISPLAY	HI 0 C
G04	POWER DISTRIBUTION UNIT, 120VAC	HC 1 B

COMPONENTS

COMPONENT	DESCRIPTION	PAGE
G04	POWER DISTRIBUTION UNIT, 120VAC	HI 2 B
G05A	12V, DASH POWER OUTLET	IG 0 C
G05E	12V SOCKET, RADIO SHELF	IG 2 C
G05F	12V DASH POWER OUTLET	IG 0 C
G06A	12V STUDS, CB DASH	IG 3 D
G06B	12V STUDS, CB OVERHEAD	IG 2 D
H02A	HORN DUAL TONE 1	GQ 1 D
H02A_S	CITY HORN SERVICE	GQ 4 E
H03	BACKUP ALARM	GF 3 D
H03	BACKUP ALARM	GK 1 E
H05	Buzzer	IA 3 C
H16	METHANE FUME DETECTOR	CM 2 B
H17	METHANE DETECTION STATUS	CM 2 B
L_E10LED	LH LED TAIL LAMP	GF 0 C
M01	WINDSHIELD WIPER MOTOR	GP 2 D
M02	Motor, windscreen washer pump	GP 3 B
M04	MOTOR, STARTER	AE 1 B
M04	MOTOR, STARTER	AF 2 A
M04	MOTOR, STARTER	AL 0 B
M04	MOTOR, STARTER	AM 0 B
M04	MOTOR, STARTER	AN 0 B
M04A	MOTOR STARTER TC	AE 0 B
M04A	MOTOR STARTER TC	AF 3 A
M04B	MOTOR STARTER CUMMINS	AM 1 B
M06DS	Motor, Window Winder D.S.	IC 1 C
M06PS	Motor, Window Winder P.S.	IC 2 E
M18	MOTOR SINK PUMP	HE 0 D
M18	MOTOR SINK PUMP	HH 0 D
M20L	HEATED SEAT, LEFT	IB 1 D
M20R	HEATED SEAT, RIGHT	IB 2 D
M41	MOTOR PUMP UREA	CN 2 C
M55	Condensor Fan, Parking Cooler	HJ 0 D
M80L	Drivers Side Door Lock Control Assembly	IA 3 D
M80L	Drivers Side Door Lock Control Assembly	IF 1 D
M80LS	DRIVERS SIDE COURTESY LAMP SWITCH	IA 3 B
M80R	Passenger Side Door Lock Control Assembly	IA 3 D
M80R	Passenger Side Door Lock Control Assembly	IF 2 D
M80RS	PASSENGER SIDE COURTESY LAMP SWITCH	IA 4 D
M110L	Mirror Motors & Heater, LHS	IC 0 B
M110L	Mirror Motors & Heater, LHS	IE 1 C
M110R	Mirror Motors & Heater, RHS	IC 3 B
M110R	Mirror Motors & Heater, RHS	IE 3 C
MCDE2	DIAGNOSTIC CONNECTOR	BG 3 D
OBD-II	ON-BOARD-DIAGNOSTICS VENDEND	XF 3 D
R01A	Heater Engine Preheat 110V	CA 2 D
R05A	AIR DRYER	FA 3 C
R05C	AIR DRYER	FA 3 C
R08A	TERMINATION RESISTOR	CC 0 B
R08A	TERMINATION RESISTOR	CN 0 B
R08B	TERMINATING RESISTOR	EB 0 A

COMPONENT	DESCRIPTION	PAGE
R08B	TERMINATING RESISTOR	EH 0 A
R08C	TERMINATING RESISTOR	XB 0 C
R08E	RESISTOR J1939 TERMINATION	JG 2 C
R08E	RESISTOR J1939 TERMINATION	JH 1 E
R08F	TERMINATION RESISTOR, CAN-BUS	BC 2 D
R08G	TERMINATING RESISTOR	BE 3 C
R08H	TERMINATING RESISTOR CAN 7	KH 3 B
R08H	TERMINATING RESISTOR CAN 7	XC 2 C
R08I	TERMINATING RESISTOR	CD 2 B
R08I	TERMINATING RESISTOR	CP 2 B
R08M	TERMINATING RESISTOR CAN-BUS	XA 0 C
R08N	TERMINATING RESISTOR, CAN-BUS	BI 3 B
R08N	TERMINATING RESISTOR, CAN-BUS	BM 2 A
R09	Heater, fuel filter	CE 2 C
R09B	HEATER, FUEL FILTER	CE 2 C
R15	Windscreen heater	IB 4 D
R18A	HEATER DRAIN VALVE	FA 0 C
R18B	HEATER DRAIN VALVE	FA 1 C
R21	Termination resistor	XA 0 B
R21	Termination resistor	XF 3 C
R21_TGW	TERMINATING RESISTOR TGW OVERLAY	BJ 2 B
R21A	TERMINATING RESISTOR DL10	XF 2 D
R21B	TERMINATING RESISTOR DL10	XF 1 C
R29	Heater, NOxCare tank to pump hose	CD 1 C
R29	Heater, NOxCare tank to pump hose	CK 4 D
R29	Heater, NOxCare tank to pump hose	CP 1 C
R30	HEATER, BACKFLOW HOSE	CD 2 C
R30	HEATER, BACKFLOW HOSE	CP 2 C
R31	Heater, NOxCare pump to injector hose	CD 1 C
R31	Heater, NOxCare pump to injector hose	CK 3 E
R31	Heater, NOxCare pump to injector hose	CP 1 C
R_E10LED	RH LED TAIL LAMP	GF 1 C
RE01	RELAY TRAILER STOP	AC 0 C
RE01	RELAY TRAILER STOP	MA 0 B
RE02	RELAY TRAILER CLEARANCE	AC 1 C
RE02	RELAY TRAILER CLEARANCE	MA 1 B
RE03	RELAY TRAILER MARKER	AC 1 C
RE03	RELAY TRAILER MARKER	MA 2 B
RE04	EFRC RELAY, EMS	AC 2 C
RE04	EFRC RELAY, EMS	AG 1 B
RE05	EFRC RELAY, IGN	AC 3 C
RE06	RELAY CAND CONDITIONER	AD 2 B
RE06	RELAY CAND CONDITIONER	BP 3 B
RE07	VOLVO FUEL COOLER CUMMINS DEF MODE	AD 3 B
RE07	VOLVO FUEL COOLER CUMMINS DEF MODE	BP 1 B
RE07	VOLVO FUEL COOLER CUMMINS DEF MODE	CC 1 B
RE07	VOLVO FUEL COOLER CUMMINS DEF MODE	CN 1 B
RE08	CES	AD 2 D
RE08	CES	CP 3 B
RE09	UREA HEATER TANK TO PUMP	AD 0 D

COMPONENTS

COMPONENT	DESCRIPTION	PAGE
RE09	UREA HEATER TANK TO PUMP	CD 1 B
RE09	UREA HEATER TANK TO PUMP	CP 1 B
RE10	UREA HEATER PUMP TO INJ.	AD 1 D
RE10	UREA HEATER PUMP TO INJ.	CD 1 B
RE10	UREA HEATER PUMP TO INJ.	CP 1 B
RE11	UREA HEATER BACKFLOW	AD 1 D
RE11	UREA HEATER BACKFLOW	CD 2 B
RE11	UREA HEATER BACKFLOW	CP 2 B
S01	Switch, main lighting, selector type	GA 1 C
S02	Stalk Switch, Full-Dipped Beams/ Cruise	AH 2 B
S02	Stalk Switch, Full-Dipped Beams/ Cruise	GA 2 B
S04	SWITCH, CLIMATE FAN SELECTOR TYPE	HB 0 B
S05	SWITCH, INTERIOR LIGHTING	HD 0 B
S05	SWITCH, INTERIOR LIGHTING	HE 2 D
S05	SWITCH, INTERIOR LIGHTING	HH 2 D
S06	SWITCHES, WINDSHIELD WIPER/CLUSTER STALK	BA 1 C
S06	SWITCHES, WINDSHIELD WIPER/CLUSTER STALK	GP 0 C
S07	SWITCH, ENGINE BRAKE SELECTOR TYPE	AJ 3 D
S07B	SWITCH, ENGINE BRAKE ON/OFF	AJ 2 B
S08	SWITCH, DIFFERENTIAL GEAR LOCK, INTERWHEE	FD 1 B
S09	SWITCH, DIFFERENTIAL GEAR LOCKS, INTERA	FD 2 B
S11A	SWITCH, LIFT AXLE	FB 0 C
S11B	SWITCH, LIFT AXLE	FB 1 C
S11C	SWITCH, LIFT AXLE	FB 2 C
S11D	SWITCH, AIR SUSPENSION MANUAL CONTROL ON/	EB 2 D
S11D	SWITCH, AIR SUSPENSION MANUAL CONTROL ON/	EH 2 D
S11E	SWITCH, SUSP. CTRL. UP/DOWN	EB 3 D
S11E	SWITCH, SUSP. CTRL. UP/DOWN	EH 3 D
S11F	LOAD DISTRIBUTION SWITCH	EH 3 B
S12	SWITCH, SNOWPLOW LAMP	GI 2 B
S14A	Switch, City Horn/Air Horn	GQ 1 C
S15	SWITCH, IGNITION	AB 1 B
S24	SWITCH, STALK, ENGINE BRAKE	AJ 2 D
S24A	STALK SWITCH, RETARDER, ALLISON	DE 4 D
S24C	SWITCH, ON/OFF RETARDER, ALLISON	DE 4 C
S24D	SWITCH STALK ENGINE BRAKE	AJ 1 D
S28A	SWITCH, PTO (POWER TAKE-OFF)	DP 2 C
S28B	SWITCH, PTO (POWER TAKE-OFF)	DP 3 C
S28C	SWITCH, PTO (POWER TAKE-OFF)	DP 4 C
S28J	SWITCH, DUAL PTO ISHIFT	BI 2 B
S28J	SWITCH, DUAL PTO ISHIFT	BM 1 B
S31	SWITCH, TCS (TRACTION CONTROL SYSTEM)	EA 3 B
S31	SWITCH, TCS (TRACTION CONTROL SYSTEM)	EC 4 B
S31	SWITCH, TCS (TRACTION CONTROL SYSTEM)	EG 3 B
S41	Switch, battery main switch control	AM 2 C
S43	PRESSURE SWITCH, PARKING BRAKE INDICATOR,	AH 4 D
S43A	SWITCH, PRESSURE PARK BRAKE, N.C.	DF 2 E
S43B	PRESSURE SWITCH, PARK BRAKE N.C.	DB 2 D
S43C	TRAILER PARK DETECTION SWITCH, N.C.	GA 3 B
S45BA	EATON	BB 2 B

COMPONENT	DESCRIPTION	PAGE
S45BB	VOLVO	BB 1 B
S45BC	ROCKWELL	BB 2 B
S047	SW. IWDL FRONT ENGAGED	BB 3 B
S047A	SW. IWDL 3RD AXLE. ENGAGED	BB 3 B
S48	Pressure switch, brake light, NO.	GB 3 D
S048B	SW. IWDL REAR-REAR ENGAGED	BB 4 B
S49	Position switch, reverse lamps, NO.	GK 2 B
S58	Position Switch, Clutch Pedal	AI 3 B
S59	Position switch, brake pedal, NO.	AI 3 C
S61A	Position Switch, Seat Belt Lock, NO	IB 0 D
S75	SWITCH, BEACON WARNING LIGHT	GJ 1 B
S76	SWITCH, SPOTLIGHTS	GG 1 C
S80	DOOR LOCK CONTROL MODULE	IF 1 B
S80D	Driver Side Door Control Panel	IC 2 B
S80P	Passenger Side Door Control Panel	IC 2 D
S87	SWITCH SINK/ FAUCET	HE 0 C
S87	SWITCH SINK/ FAUCET	HH 0 C
S88	SWITCH, 5th WHEEL SLIDE	FC 2 B
S89	Position switch, Hood tilt	BM 4 B
S93	SWITCH, SUSPENSION DUMP	FC 0 B
S97	SWITCH, INSIDE/OUTSIDE AIR CLEANER	CH 2 B
S101	Position switch, gear box neutral positi	DB 1 C
S104	SWITCH, MARKER INTERRUPT	JD 2 C
S104A	SWITCH, AUX 1	NA 1 C
S104B	SWITCH, AUX 2	NA 2 C
S104C	SWITCH, AUX 3	NA 3 C
S104D	SWITCH, AUX 4	NA 4 C
S121	SWITCH, TOUCH LOCK	FF 1 C
S169	Switch, Battery Main	AB 4 A
S169	Switch, Battery Main	AF 2 B
S169	Switch, Battery Main	AM 1 C
S169	Switch, Battery Main	HI 2 B
S169A	SWITCH BATTERY BI-STABLE	AM 3 C
S171	SWITCH, GEAR LEVER I-SHIFT	DA 1 D
S171A	SWITCH GEAR LEVER I-SHIFT PUSH BUTTON	DA 3 D
S171B	Solenoid, B 5th Wheel Release	FF 3 D
S202	Switch, LDWS, Lane Departure Warning Sys	JG 3 C
S202	Switch, LDWS, Lane Departure Warning Sys	JH 1 B
S212	SWITCH HILL ASSIST	EC 1 D
S212	SWITCH HILL ASSIST	EG 4 B
S223	SWITCH, ECO ROLL	AH 1 E
S234	Switch, Heated Windshield	IB 3 B
S316	SWITCH ENGINE START ENABLE REAR	BM 3 B
SK141A	SPLICE PACK, ILLUMINATION	DA 1 A
SK141A	SPLICE PACK, ILLUMINATION	DB 1 A
SK141A	SPLICE PACK, ILLUMINATION	DP 2 A
SK141A	SPLICE PACK, ILLUMINATION	EB 4 A
SK141A	SPLICE PACK, ILLUMINATION	EH 4 A
SK141A	SPLICE PACK, ILLUMINATION	FB 0 A
SK141A	SPLICE PACK, ILLUMINATION	FC 0 A

COMPONENTS

COMPONENT	DESCRIPTION	PAGE
SK141A	SPLICE PACK, ILLUMINATION	FD 1 A
SK141A	SPLICE PACK, ILLUMINATION	GB 0 A
SK141A	SPLICE PACK, ILLUMINATION	HB 0 A
SK141A	SPLICE PACK, ILLUMINATION	JD 2 A
SK141A	SPLICE PACK, ILLUMINATION	JH 1 A
SK141B	SPLICE PACK, ILLUMINATION	CH 2 A
SK141B	SPLICE PACK, ILLUMINATION	DE 4 A
SK141B	SPLICE PACK, ILLUMINATION	EA 3 A
SK141B	SPLICE PACK, ILLUMINATION	EC 3 A
SK141B	SPLICE PACK, ILLUMINATION	EG 3 A
SK141B	SPLICE PACK, ILLUMINATION	GB 1 A
SK141B	SPLICE PACK, ILLUMINATION	GI 2 A
TC01	J560 PLUG, 7 PIN	MA 0 D
TC02	J560 PLUG, 7 PIN	MA 2 D
TC03	J560 RECEPTACLE WITH QCS2, 7 PIN	MB 2 B
TC04	J560 PLUG, 7 PIN	MB 2 C
TC05	J560 PLUG, 7 PIN	MB 2 D
TC06	J560 PLUG, 7 PIN	MB 3 C
TC07	J560 PLUG, 7 PIN	MB 3 D
TC08	J560 RECEPTACLE WITH QCS2, 7 PIN	MB 1 D
U01	STUD, POWER 1	AA 1 A
U01	STUD, POWER 1	AB 3 B
U01	STUD, POWER 1	CD 1 A
U01	STUD, POWER 1	CP 1 A
U01	STUD, POWER 1	DB 1 C
V23	Diode, Water heater	CA 3 B
X11	Connector, Engine	CB 1 C
X11A	CONNECTORS CUMMINS ISX-G ENGINE INTERFACE	CL 1 C
X17A	Auxiliary Connector 1	NA 1 C
X17A1	CONNECTOR INTERNAL AUX SW POWER 1	NA 1 D
X17B	Auxiliary Connector 2	NA 2 C
X17B1	CONNECTOR INTERNAL AUX SW POWER 2	NA 2 D
X17C	Auxiliary Connector 3	NA 3 C
X17C1	CONNECTOR INTERNAL AUX SW POWER 3	NA 3 D
X17D	Auxiliary Connector 4	NA 4 C
X24	Socket, +12V Accessories power supply	HE 4 D
X62	Connector, Tail lift preparation	ND 3 A
X62A	CONNECTOR LIFT GATE	ND 3 A
X66	Connector, USB, Audio	KD 1 C
X67	Connector, AUX, Audio	KD 1 B
X87	Connector, Cummins Crossover (14 way)	CP 4 D
X89	Connector, Water-in-fuel Sensor	CD 0 C
X89	Connector, Water-in-fuel Sensor	CP 0 C
X147B	CONNECTOR RS232	JH 4 C
X192	CONNECTOR CUMMINS CES	CP 2 D
Y11	ABS VALVE LH 1ST AXLE	EA 1 B
Y11	ABS VALVE LH 1ST AXLE	EC 1 B
Y11	ABS VALVE LH 1ST AXLE	EG 1 B
Y12	ABS VALVE RH 1ST AXLE	EA 0 B
Y12	ABS VALVE RH 1ST AXLE	EC 0 B

COMPONENT	DESCRIPTION	PAGE
Y12	ABS VALVE RH 1ST AXLE	EG 0 B
Y13	ABS VALVE LH 2ND AXLE	EA 2 D
Y13	ABS VALVE LH 2ND AXLE	EC 1 B
Y13	ABS VALVE LH 2ND AXLE	EG 1 B
Y14	ABS VALVE RH 2ND AXLE	EA 1 D
Y14	ABS VALVE RH 2ND AXLE	EC 0 E
Y14	ABS VALVE RH 2ND AXLE	EG 0 E
Y15	ABS VALVE LH 3RD AXLE	EA 4 D
Y15	ABS VALVE LH 3RD AXLE	EC 2 D
Y15	ABS VALVE LH 3RD AXLE	EG 2 E
Y16	ABS VALVE RH 3RD AXLE	EA 3 D
Y16	ABS VALVE RH 3RD AXLE	EC 2 D
Y16	ABS VALVE RH 3RD AXLE	EG 2 E
Y18A	SOLENOID VALVE, SINGLE PTO	DP 1 D
Y18B	SOLENOID VALVE, DUAL PTO ENGINE MOUNTED	DP 4 D
Y18G	SOLENOID TRANS. PTO 1	DA 3 B
Y18G	SOLENOID TRANS. PTO 1	DP 0 D
Y18H	SOLENOID TRANS PTO 2	DA 3 B
Y18H	SOLENOID TRANS PTO 2	DP 0 B
Y25A	SOLENOID, LEVEL CONTROL DRIVE AXLES	EB 1 B
Y25A	SOLENOID, LEVEL CONTROL DRIVE AXLES	EH 1 A
Y29A	SOLENOID, LEVEL CONTROL AUX. AXLE	EB 2 B
Y29A	SOLENOID, LEVEL CONTROL AUX. AXLE	EH 2 A
Y35	Solenoid, Engine Fan	CB 2 B
Y35	Solenoid, Engine Fan	CC 0 A
Y35	Solenoid, Engine Fan	CL 3 E
Y35	Solenoid, Engine Fan	CN 1 A
Y35A	SOLENOID ENGINE FAN	CC 1 B
Y35A	SOLENOID ENGINE FAN	CN 1 B
Y35E	SOLENOID, ENGINE FAN E-VISCO	CL 3 D
Y42	Clutch, magnetic, air conditioning compr	HA 1 D
Y51	Solenoid valve, Air dryer	FA 4 C
Y53	SOLENOID, ETHER START	CA 0 C
Y57	SOLENOID VALVE, TRAC CONTROL	EA 1 D
Y57	SOLENOID VALVE, TRAC CONTROL	EC 3 D
Y57	SOLENOID VALVE, TRAC CONTROL	EG 3 D
Y57A	SOLENOID VALVE, TRAC CONTROL ESP	ED 0 C
Y64	Solenoid, Retarder Air Accumlator	DE 1 B
Y80	Solenoid valve, AdBlue dosing unit	CK 3 B
Y80A	Solenoid valve, AdBlue dosing unit	CD 0 C
Y81	Solenoid valve, urea heating tank	CK 2 D
Y81A	Solenoid valve, urea heating tank	CD 1 C
Y81A	Solenoid valve, urea heating tank	CP 1 C
Y100	SOLENOID VALVE TRAILER ABS_ESP	ED 4 C
Y106	SOLENOID HILL ASSIST BRAKE	EC 3 D
Y106	SOLENOID HILL ASSIST BRAKE	EG 3 D
Y110	SOLENOID VALVE, OIL THERMOSTAT	DA 4 C
Z01	VEHICLE DIAGNOSTICS	XA 0 B
Z02	TRAILER CONNECTION, 7-POLE UNIT, 24N	MA 3 C
Z03A	BODY BUILDER CONNECTOR #1	BH 0 C

COMPONENTS

COMPONENT	DESCRIPTION	PAGE
Z03B	BODY BUILDER CONNECTOR #2	BH 2 B
Z03C	BODY BUILDER CONNECTOR #3	BI 1 D
Z03C	BODY BUILDER CONNECTOR #3	BM 1 D
Z03D	BODY BUILDER CONNECTOR #4	BI 3 D
Z03D	BODY BUILDER CONNECTOR #4	BM 3 D
Z04	BODY BUILDER CAMERA PREP	BH 1 B
Z05	Solenoid Pack	CH 3 D
Z05	Solenoid Pack	FB 1 D
Z05	Solenoid Pack	FC 3 D
Z05	Solenoid Pack	FD 2 D
Z05	Solenoid Pack	FF 1 D
Z05	Solenoid Pack	GQ 2 C
Z06	STEERING WHEEL CONTACT REEL	BB 1 E
Z06	STEERING WHEEL CONTACT REEL	GA 3 B
Z06	STEERING WHEEL CONTACT REEL	JA 1 D
Z08	CONNECTOR, ROAD RELAY	BC 0 C
Z10	ONBOARD DIAGNOSTIC CONNECTOR VENDOR ENGIN	XF 2 D

COMPONENT	DESCRIPTION	PAGE
Z10CA	OPTION CONNECTOR A, CAB SIDE	BH 2 D
Z10CB	OPTION CONNECTOR B, CAB SIDE	BH 3 D
Z10FA	OPTION CONNECTOR A, CHASSIS SIDE	BH 2 D
Z10FB	OPTION CONNECTOR B, CHASSIS SIDE	BH 3 D
Z13	OPTION CONNECTOR, SNOWPLOW LIGHTS	GI 1 D
Z15	CONNECTOR, BODYBUILDER - CAB SIDE	BH 1 E
Z16	CONNECTOR, BODYBUILDER	BH 1 D
Z17	RECEPTACLE, 120VAC	HC 1 D
Z17	RECEPTACLE, 120VAC	HI 2 D
Z18	RECEPTACLE, D.S. CABINET	HC 1 D
Z18	RECEPTACLE, D.S. CABINET	HI 3 C
Z19	RECEPTACLE, P.S. CABINET	HC 2 D
Z19	RECEPTACLE, P.S. CABINET	HI 3 C
Z20	RECEPTACLE, UNDER BUNK/ TABLE	HC 2 D
Z20	RECEPTACLE, UNDER BUNK/ TABLE	HI 4 C
Z21	QUALCOMM OMNIVISION PREP KIT	BE 2 C
Z23	CONNECTOR TGW2 PROGRAM	BJ 2 A

INLINES

INLINE	PAGE
12V0B_H2:A	HD 1 D
12V0B_H2:B	HD 1 C
12V0B_H4:A	HD 1 D
12V0B_H4:B	HD 1 C
12VSL:A	HE 1 D
12VSL:A	HH 2 C
12VSL:B	HE 1 B
12VSL:B	HH 2 B
AUXAC:A	HD 1 C
AUXAC:B	HD 1 C
AXAX1:A	NA 1 B
AXAX1:A	NA 3 B
AXAX1:B	NA 1 C
AXAX1:B	NA 3 C
AXAX:A	NA 1 B
AXAX:A	NA 3 B
AXAX:B	NA 1 C
AXAX:B	NA 3 C
AXBWL:A	IH 1 B
AXBWL:B	IH 1 D
AXBWR:A	IH 1 B
AXBWR:B	IH 1 D
B1-1:2	BD 2 B
B1-2:1	BC 0 D
B1-2:2	BC 1 B
B1-3:1	BG 4 C
B1-3:1	GC 3 B
B1-3:2	BG 4 C
B1-3:2	GC 2 B
B1-4:1	FF 1 D
B1-4:1	IB 3 E
B1-4:2	FF 1 B
B1-4:2	IB 3 B
B1-5:2	BC 1 B
B1-5:2	BG 4 C
B1-6:2	BD 2 B
B3:R16_30	AH 2 B
B3:R16_85	AH 2 C
B3:R16_86	AH 2 B
B3:R16_87	AH 2 C
B3:R17_30	AH 2 B
B3:R17_85	AH 3 B
B3:R17_86	AH 3 B
B3:R17_87	AH 2 B
B25JMP:1	AI 4 D
B25JMP:3	AI 4 D
B25JMP:4	AI 4 D
B25JMP:5	AI 4 D
B25JMP:6	AI 4 D
B50.B:1	ED 2 D

INLINE	PAGE
B50.B:2	ED 1 D
B50.B:3	ED 2 D
B50.B:4	ED 2 D
BFBR:A	IH 2 B
BFBR:B	IH 2 C
BFORF1:A	JH 1 B
BFORF1:B	JH 0 C
BFORF1:C	JH 2 C
BFORF1:D	JH 2 D
BFORF1:E	JH 2 D
BFORF1:F	JH 3 C
BFORF1:G	JH 3 C
BFORF1:H	JH 2 D
BFORF2:A	JH 3 D
BFORF2:B	JH 2 D
BFORF2:C	JH 2 D
BFORF2:D	JH 2 E
BFORF2:E	JH 2 E
BFORF2:F	JH 2 E
BFORF2:G	JH 3 D
BFORF2:H	JH 3 D
BFORF2:J	JH 3 D
BWBR:A	IH 1 B
BWBR:B	IH 1 C
CAMC:A	JF 3 C
CAMC:B	EB 3 B
CAMC:B	EH 3 B
CAMC:B	JE 0 B
CAMC:B	JE 3 B
CETE:A	GK 1 C
CETE:B	GF 0 B
CETE:C	GF 0 B
CETE:D	GF 0 B
CETE:E	GF 1 B
CETL:A	GF 3 A
CETL:A	GF 3 C
CETL:A	GK 1 D
CETL:A	GK 1 D
CETL:B	GF 1 B
CETL:B	GF 1 B
CETL:B	GF 3 A
CETL:B	GF 3 C
CETL:C	GF 0 B
CETL:C	GF 0 B
CETL:C	GF 3 A
CETL:C	GF 3 C
CETL:D	GF 1 B
CETL:D	GF 1 B
CETL:D	GF 3 A
CETL:D	GF 4 C

INLINE	PAGE
CETL:E	GF 1 B
CETL:E	GF 1 B
CETL:E	GF 4 A
CETL:E	GF 2 C
CLTR:A	DB 1 D
CLTR:B	DB 0 D
DLJ1:1	XB 0 D
DLJ1:2	XB 0 D
DLJ2:1	XB 0 D
DLJ2:2	XB 0 D
DSFC:A	BB 3 E
DSFC:B	BB 2 C
DSFC:C	BB 3 E
DSFC:D	BB 2 C
DSFC:E	BB 3 D
DSFC:F	BB 3 D
DSFC:J	BB 2 C
DVAD:A	FA 1 D
DVAD:B	FA 1 B
DVDV:A	FA 1 D
DVDV:B	FA 1 C
EFRC.A1:1	AC 1 D
EFRC.A1:1	MA 1 B
EFRC.A1:1	MA 1 C
EFRC.A1:1	MA 2 C
EFRC.A1:1	MB 1 A
EFRC.A1:1	MB 2 B
EFRC.A1:1	MC 2 C
EFRC.A1:2	AC 1 D
EFRC.A1:2	MA 2 B
EFRC.A1:2	MA 1 C
EFRC.A1:2	MA 2 C
EFRC.A1:2	MB 1 A
EFRC.A1:2	MB 2 B
EFRC.A1:2	MC 2 C
EFRC.A1:3	AC 0 D
EFRC.A1:3	MA 1 B
EFRC.A1:3	MA 1 C
EFRC.A1:3	MA 2 C
EFRC.A1:3	MB 1 A
EFRC.A1:3	MB 2 B
EFRC.A1:3	MC 2 C
EFRC.A2:A	AD 1 C
EFRC.A2:A	MA 3 C
EFRC.A2:A	MA 1 C
EFRC.A2:A	MA 2 C
EFRC.A2:A	MB 2 A
EFRC.A2:A	MB 3 B
EFRC.A2:A	MC 2 D
EFRC.A2:B	AD 1 C

INLINE	PAGE
EFRC.A2:B	MA 3 C
EFRC.A2:B	MA 1 C
EFRC.A2:B	MA 2 C
EFRC.A2:B	MB 1 A
EFRC.A2:B	MB 3 B
EFRC.A2:B	MC 2 D
EFRC.A2:C	AC 3 D
EFRC.A2:C	MA 3 B
EFRC.A2:C	MA 1 C
EFRC.A2:C	MA 2 C
EFRC.A2:C	MB 1 A
EFRC.A2:C	MB 3 B
EFRC.A2:C	MC 2 C
EFRC.B1:A	AD 1 C
EFRC.B1:A	DB 4 B
EFRC.B1:A	DF 0 A
EFRC.B1:B	AD 0 C
EFRC.B1:B	CC 1 A
EFRC.B1:B	CL 3 A
EFRC.B1:B	CN 1 A
EFRC.B2:A	AC 2 D
EFRC.B2:A	AG 4 B
EFRC.B2:B	AC 2 D
EFRC.B2:B	AG 2 B
EFRC.C1:A	AD 2 B
EFRC.C1:A	AD 0 E
EFRC.C1:A	CD 1 B
EFRC.C1:A	CP 1 B
EFRC.C1:B	AD 2 C
EFRC.C1:B	AD 0 E
EFRC.C1:B	CD 1 B
EFRC.C1:B	CP 1 B
EFRC.C1:C	AD 1 C
EFRC.C1:C	AD 1 E
EFRC.C1:C	CD 1 B
EFRC.C1:C	CP 1 B
EFRC.C1:D	AD 1 B
EFRC.C1:D	AD 0 E
EFRC.C1:D	CD 1 B
EFRC.C1:D	CP 1 B
EFRC.C1:E	AD 2 B
EFRC.C1:E	AD 1 E
EFRC.C1:E	CD 2 B
EFRC.C1:E	CP 2 B
EFRC.C1:F	AD 2 C
EFRC.C1:F	AD 1 E
EFRC.C1:F	CD 2 B
EFRC.C1:F	CP 2 B
EFRC.C3:A	AD 2 C
EFRC.C3:A	BP 3 B

INLINE	PAGE
EFRC.C3:C	AD 2 B
EFRC.C3:C	BP 3 B
EFRC.C3:D	AD 2 C
EFRC.C3:D	BP 3 B
EFRC.C3:E	AD 3 C
EFRC.C3:F	AD 2 B
EFRC.C3:F	BP 3 B
EFRC.C4:A	AD 3 C
EFRC.C4:A	CC 1 B
EFRC.C4:A	CN 1 B
EFRC.C4:C	AD 3 B
EFRC.C4:C	BP 1 B
EFRC.C4:C	CC 1 B
EFRC.C4:C	CN 1 B
EFRC.C4:D	AD 3 C
EFRC.C4:D	BP 1 B
EFRC.C4:D	CC 1 B
EFRC.C4:D	CN 2 B
EFRC.C4:E	AD 3 C
EFRC.C4:E	BP 1 B
EFRC.C4:F	AD 3 B
EFRC.C4:F	BP 1 B
EFRC.C4:F	CC 1 B
EFRC.C4:F	CN 2 B
EFRC.D1:A	AD 1 B
EFRC.D1:A	MA 3 B
EFRC.D1:B	AC 2 B
EFRC.D1:B	AG 1 B
EFRC.D1:C	AC 2 B
EFRC.D1:D	AC 1 B
EFRC.D1:D	MA 1 B
EFRC.D1:E	AC 1 B
EFRC.D1:E	MA 2 B
EFRC.D1:F	AC 0 D
EFRC.D1:G	AD 1 B
EFRC.D1:G	MA 3 B
EFRC.D1:H	AC 2 B
EFRC.D1:H	AD 3 D
EFRC.D1:H	AG 1 B
EFRC.D1:J	AC 2 B
EFRC.D1:J	AD 3 E
EFRC.D1:K	AD 3 E
EFRC.D1:L	AC 0 B
EFRC.D1:L	MA 0 B
EFRC.D1:M	AD 0 C
EFRC.D1:M	AD 3 E
EFRC.D2:A	AC 2 D
EFRC.D2:A	AG 3 B
EFRC.D2:A	BP 2 B
EFRC.D2:B	AC 4 D

INLINE	PAGE
EFRC.D2:C	AC 4 D
EFRC.D2:D	AC 3 D
EFRC.D2:D	EA 2 A
EFRC.D2:D	EC 2 A
EFRC.D2:D	EG 2 B
EFRC.D2:E	AD 2 E
EFRC.D2:E	CP 3 B
EFRC.D2:F	AC 4 D
EFRC.D2:F	FA 2 A
EFRC.D2:G	AC 3 D
EFRC.D2:G	CE 2 B
EFRC.D2:H	AC 2 D
EFRC.D2:H	AG 0 B
EFRC.D2:J	AC 2 D
EFRC.D2:J	AG 0 B
EFRC.D2:K	AD 0 C
EFRC.D2:K	AD 2 E
EFRC.D2:K	CP 3 B
EFRC.D2:L	AC 3 D
EFRC.D2:L	AG 3 B
EFRC.D2:L	CL 3 A
EFRC.D2:M	AC 3 D
EFRC.D2:M	AG 4 B
EFRC.D2:M	CL 3 A
EFRC.D2:N	AC 4 D
EFRC.D2:N	FG 0 A
EFRC.D2:N	FG 1 A
EFRC.D2:N	FG 2 A
EFRC_EXT:A	AD 4 E
EFRC_EXT:B	AD 4 E
EFRC_EXT:C	AD 4 E
EFRC_EXT:D	AD 4 E
EFRC_EXT:E	AD 4 E
EFRC_EXT:F	AD 4 E
EFRC_EXT_C1:A	AD 4 C
EFRC_EXT_C1:B	AD 4 C
EFRC_EXT_C1:C	AD 4 C
EFRC_EXT_C1:D	AD 4 C
EFRC_EXT_C1:E	AD 4 C
EFRC_EXT_C1:F	AD 4 C
EICFC:1	CK 4 C
EICFC:2	CK 4 C
EICFC:3	CK 4 C
EICFC:4	CK 4 C
EICFC:5	CK 4 C
EICFC:6	CK 4 C
EICFC:7	CK 4 C
EICFC:8	CK 4 C
EICFC:9	CK 4 C
EICFC:10	CK 4 C

INLINES

INLINE	PAGE
EICFC:11	CK 4 C
EICFC:12	CK 4 C
EICFC:13	CK 4 C
EICFC:14	CK 4 C
EICFC:15	CK 4 C
FCAD:A	FA 0 D
FCAD:A	FA 3 D
FCAD:A	FA 3 D
FCAD:A	FA 1 D
FCAD:B	FA 1 B
FCAD:B	FA 3 B
FCAD:B	FA 3 B
FCAD:B	FA 1 B
FCAR:A	BB 0 C
FCAR:B	BB 0 B
FCAX1:A	NA 1 E
FCAX2:A	NA 1 E
FCAX3:A	NA 3 E
FCCAVS:A	JE 0 C
FCCAVS:A	JE 3 C
FCCAVS:B	JF 2 B
FCCAVS:C	JF 2 B
FCCAVS:D	JF 2 B
FCCE1:1	GK 4 C
FCCE1:1	GK 2 C
FCCE1:1	GK 1 C
FCCE1:1	GK 1 C
FCCE1:2	GF 1 B
FCCE1:4	EA 3 D
FCCE1:4	EC 2 D
FCCE1:4	EG 2 D
FCCE1:5	EA 3 D
FCCE1:5	EC 2 D
FCCE1:5	EG 2 D
FCCE1:6	EA 3 D
FCCE1:6	EC 2 D
FCCE1:6	EG 2 D
FCCE1:7	EA 3 D
FCCE1:7	EC 2 D
FCCE1:7	EG 2 D
FCCE1:8	EA 3 D
FCCE1:8	EC 2 D
FCCE1:8	EG 3 D
FCCE1:12	GF 1 B
FCCE1:13	GF 1 B
FCCE1:14	GF 1 B
FCCE1:15	BB 2 D
FCCE1:16	BA 4 B
FCCE1:17	BA 3 B
FCCE1:18	EA 1 D

INLINE	PAGE
FCCE1:18	EC 4 D
FCCE1:18	EG 4 D
FCCE1:19	EA 1 D
FCCE1:19	EC 4 D
FCCE1:19	EG 4 D
FCCE1:20	EA 1 D
FCCE1:20	EC 0 D
FCCE1:20	EG 0 D
FCCE1:21	EA 1 D
FCCE1:21	EC 0 D
FCCE1:21	EG 0 D
FCCE1:22	EA 1 D
FCCE1:22	EC 0 D
FCCE1:22	EG 0 D
FCCE1:23	BA 4 B
FCCE2:3	EA 2 D
FCCE2:3	EC 1 D
FCCE2:3	EG 1 D
FCCE2:4	EA 2 D
FCCE2:4	EC 1 D
FCCE2:4	EG 1 D
FCCE2:5	EA 4 D
FCCE2:5	EC 2 D
FCCE2:5	EG 2 D
FCCE2:6	EA 3 D
FCCE2:6	EC 2 D
FCCE2:6	EG 2 D
FCCE2:7	EA 4 D
FCCE2:7	EC 2 D
FCCE2:7	EG 2 D
FCCE2:12	GF 0 B
FCCE2:13	EA 1 D
FCCE2:13	EC 3 D
FCCE2:13	EG 3 D
FCCE2:14	EA 1 D
FCCE2:14	EC 3 D
FCCE2:14	EG 3 D
FCCE2:16	BB 2 C
FCCE2:17	BB 2 C
FCCE2:18	EA 0 D
FCCE2:18	EC 0 B
FCCE2:18	EG 0 B
FCCE2:19	EA 0 D
FCCE2:19	EC 0 B
FCCE2:19	EG 0 B
FCCE2:20	EA 2 D
FCCE2:20	EC 1 B
FCCE2:20	EG 1 B
FCCE2:21	EA 2 D
FCCE2:21	EC 1 B

INLINE	PAGE
FCCE2:21	EG 1 B
FCCE2:22	EA 2 D
FCCE2:22	EC 1 B
FCCE2:22	EG 1 B
FCCL:A	CB 2 D
FCCL:B	CB 2 D
FCCL:C	BA 3 B
FCCL:D	BA 2 A
FCDV:A	FA 0 D
FCDV:B	FA 1 B
FCECS:1	EB 1 B
FCECS:1	EH 1 B
FCECS:3	EB 1 B
FCECS:3	EH 1 B
FCECS:4	EB 2 B
FCECS:4	EH 2 B
FCECS:5	EH 2 B
FCECS:6	EB 2 B
FCECS:6	EH 2 B
FCECS:7	EB 2 D
FCECS:7	EH 2 D
FCECS:8	EB 2 D
FCECS:8	EH 2 D
FCECS:9	EB 2 D
FCECS:9	EH 2 D
FCEGO:A	CL 2 B
FCEGO:B	CL 1 D
FCEGO:C	CL 1 D
FCEGO:D	CL 2 D
FCEGO:E	CL 1 D
FCEGO:F	CL 1 D
FCEGO:G	CL 1 D
FCEGO:H	CL 1 D
FCEIC2:1	CK 4 C
FCEIC2:2	CK 4 C
FCEIC2:3	CK 4 C
FCEIC2:4	CK 4 C
FCEIC2:5	CK 4 C
FCEIC2:6	CK 4 C
FCEIC2:7	CK 4 C
FCEIC2:8	CK 4 C
FCEIC2:9	CK 4 C
FCEIC2:10	CK 4 C
FCEIC2:11	CK 4 C
FCEIC2:12	CK 4 C
FCEIC2:13	CK 4 C
FCEIC2:14	CK 4 C
FCEIC2:15	CK 4 C
FCEIC:1	CK 1 B
FCEIC:2	CK 1 B

INLINE	PAGE
FCEIC:3	CK 2 B
FCEIC:4	CK 1 B
FCEIC:5	CK 1 B
FCEIC:6	CK 3 B
FCEIC:7	CK 0 D
FCEIC:8	CK 0 D
FCEIC:9	CK 3 C
FCEIC:10	CK 1 D
FCEIC:11	CK 1 D
FCEIC:12	CK 3 C
FCEIC:13	CK 1 D
FCEIC:14	CK 1 D
FCEIC:15	CK 1 D
FCEN:A	HA 1 C
FCEN:C	AF 0 B
FCEN:D	AF 2 C
FCES2:1	EB 2 B
FCES2:1	EH 2 B
FCES2:2	EB 2 B
FCES2:2	EH 2 B
FCES2:3	EH 2 B
FCES2:4	EB 1 A
FCES2:4	EH 1 A
FCES2:5	EB 1 B
FCES2:5	EH 1 B
FCES2:7	EB 1 B
FCES2:7	EH 1 B
FCES2:8	EB 2 D
FCES2:8	EH 2 D
FCES2:9	EB 2 D
FCES2:9	EH 2 D
FCES2:10	EB 2 D
FCES2:10	EH 2 D
FCFA2:1	JE 3 C
FCFA2:2	JE 3 C
FCFA3:1	JE 4 D
FCFA3:2	JE 4 D
FCFA:A	JE 1 C
FCFA:A	JE 3 C
FCFA:B	JE 1 C
FCFA:B	JE 3 C
FCFA:C	JE 0 C
FCFA:C	JE 3 C
FCFA:D	JE 1 D
FCFA:D	JE 4 D
FCFD1:A	GE 1 B
FCFD1:A	GE 2 B
FCFD1:B	GE 2 B
FCFD1:B	GE 3 B
FCFD1:C	GE 2 D

INLINE	PAGE
FCFD1:C	GE 3 D
FCFS1:A	CC 0 C
FCFS1:A	CN 1 B
FCFS1:B	CC 0 C
FCFS1:B	CN 1 B
FCFS2:A	CC 0 B
FCFS2:A	CN 1 B
FCFS2:B	CC 0 B
FCFS2:B	CN 1 B
FCFS:A	CC 0 C
FCFS:A	CL 3 D
FCFS:A	CL 3 E
FCFS:A	CL 3 D
FCFS:A	CN 1 C
FCFS:B	CC 0 C
FCFS:B	CL 3 E
FCFS:B	CL 3 D
FCFS:B	CL 3 D
FCFS:B	CN 1 C
FCFUS2:1	JE 4 C
FCFUS2:2	JE 4 C
FCFUS:1	JE 3 B
FCFUS:2	JE 3 B
FCGND:1	CC 4 C
FCGND:1	CL 3 B
FCGND:1	CN 4 C
FCHA:A	EC 3 D
FCHA:A	EG 3 D
FCHA:B	EC 3 D
FCHA:B	EG 3 E
FCHL:A	GD 3 C
FCHL:A	GD 2 B
FCHL:A	GD 2 C
FCHL:A	GD 4 B
FCHL:B	GD 1 C
FCHL:B	GD 3 C
FCHL:B	GD 1 B
FCHL:B	GD 3 B
FCHL:C	GD 0 C
FCHL:C	GD 2 C
FCHL:C	GD 0 B
FCHL:C	GD 2 B
FCHL:D	GD 0 C
FCHL:D	GD 2 C
FCHL:D	GD 0 B
FCHL:D	GD 2 B
FCHL:E	GD 1 C
FCHL:E	GD 3 C
FCHL:E	GD 1 B

INLINE	PAGE
FCHL:E	GD 2 B
FCHL:F	GD 1 C
FCHL:F	GD 3 C
FCHL:F	GD 1 B
FCHL:F	GD 4 B
FCHL:G	GD 1 C
FCHL:G	GD 3 C
FCHL:G	GD 1 B
FCHL:G	GD 2 B
FCHL:H	GD 0 D
FCHL:H	GD 0 D
FCHL:H	GD 2 C
FCHL:H	GD 2 B
FCHL:J	GD 1 D
FCHL:J	GD 1 D
FCHL:J	GD 2 C
FCHL:J	GD 4 B
FCHL:M	GD 3 B
FCMD:A	CM 3 C
FCMD:B	CM 3 C
FCMD:C	CM 1 E
FCMD:E	BP 2 C
FCMD:F	BP 2 D
FCPTO1:A	DP 1 D
FCPTO1:B	DP 1 D
FCPTO:A	DP 4 D
FCRS:A	BM 4 A
FCRS:B	BM 4 C
FCSCR:1	CD 0 C
FCSCR:2	CD 1 C
FCSCR:3	CD 4 D
FCSCR:4	CD 4 D
FCSCR:5	CD 3 C
FCSCR:6	CD 3 C
FCSCR:7	CD 3 C
FCSCR:8	CD 3 C
FCSCR:9	CD 4 C
FCSCR:10	CD 4 C
FCSPJ5:A	FC 3 D
FCSPJ5:B	FD 1 C
FCSPJ5:C	FC 3 C
FCSPJ5:E	FD 3 C
FCSPJ5:G	FF 1 D
FCSPJ5:H	FC 3 C
FCSPJ5:K	GQ 2 B
FCSPJ5:L	FD 1 D
FCSPJ5:M	FF 1 D
FCSPJ5:N	GQ 2 D
FCSPJ5:R	FC 2 D
FCSPJ5:S	FD 3 D

INLINES

INLINE	PAGE
FCSPJ6:A	FC 2 D
FCSPJ6:B	FD 2 C
FCSPJ6:C	FC 1 C
FCSPJ6:E	FD 3 C
FCSPJ6:F	CH 3 C
FCSPJ6:G	FB 1 C
FCSPJ6:H	FC 2 C
FCSPJ6:J	FB 0 C
FCSPJ6:K	GQ 3 B
FCSPJ6:L	FD 2 D
FCSPJ6:M	FB 2 E
FCSPJ6:N	GQ 3 D
FCSPJ6:P	FB 2 C
FCSPJ6:R	CH 3 E
FCSPJ6:R	FB 1 E
FCSPJ6:R	FC 1 D
FCSPJ6:S	FD 3 D
FCSS:A	JF 1 C
FCSS:B	JF 1 C
FCSS:C	JF 1 C
FCSS:D	JF 1 C
FCSS:E	JF 1 C
FCTC:A	MA 3 D
FCTC:A	MA 0 C
FCTC:A	MA 2 C
FCTC:A	MB 1 A
FCTC:A	MB 2 B
FCTC:A	MC 2 C
FCTPM2:A	FG 4 B
FCTPM2:B	FG 4 B
FCTPM2:C	FG 4 B
FCTPM2:D	FG 4 B
FCTPM2:F	FG 4 B
FCTPM:A	FG 2 C
FCTPM:B	FG 2 D
FCTPM:C	FG 3 C
FCTPM:D	FG 3 C
FCTR1:A	CC 2 D
FCTR1:A	CL 1 B
FCTR1:A	CN 2 D
FCTR1:B	CC 2 D
FCTR1:B	CL 1 B
FCTR1:B	CN 2 D
FCTR2:1	DA 2 B
FCTR2:1	DA 3 D
FCTR2:2	DA 2 B
FCTR2:2	DA 3 D
FCTR:A	DB 4 B
FCTR:A	DF 0 B
FCTR:B	DA 4 A

INLINE	PAGE
FCTR:B	DB 4 D
FCTR:B	DF 0 B
FCUT2:1	CC 1 C
FCUT2:2	CC 1 C
FCUT2:3	CC 1 C
FCUT2:4	CC 1 C
FCUT2:5	CC 1 C
FCUT2:6	CC 2 C
FCUT2:7	CC 2 C
FCUT2:8	CC 2 C
FCUT2:9	CC 2 C
FCUT2:10	CC 2 C
FCUT2:11	CD 3 B
FCUT2:12	CD 3 B
FCUT2:13	CD 2 C
FCUT2:14	CD 1 C
FCUT2:16	CC 3 C
FCUT2:17	CC 3 C
FCUT2:18	CC 3 C
FCUT2:19	CC 3 C
FCUT2:20	CD 1 D
FCUT2:21	CD 1 C
FCUT2:22	CD 1 C
FCUT2:23	CD 3 B
FCUT2:24	CD 2 B
FCUT4:1	CN 2 C
FCUT4:2	CN 2 C
FCUT4:3	CN 2 C
FCUT4:4	CN 2 C
FCUT4:5	CP 1 C
FCUT4:6	CP 1 C
FCUT4:7	CP 1 C
FCUT4:8	CP 1 D
FCUT4:9	CP 2 C
FCUT4:10	CP 3 B
FCUT4:11	CP 3 B
FCUT4:12	CP 3 B
FCUT4:13	CP 3 B
FCUT:1	CK 1 B
FCUT:2	CK 1 B
FCUT:3	CK 1 B
FCUT:4	CK 1 A
FCUT:5	CK 1 D
FCUT:6	CK 3 D
FCUT:7	CK 3 D
FCUT:8	CK 2 D
FCUT:9	CK 2 D
FCUT:10	CK 2 D
FCUT:11	CK 2 D
FCUT:12	CK 2 D

INLINE	PAGE
FCUT:13	CK 2 D
FCUT:14	CK 1 D
FCVIS:A	CC 1 B
FCVIS:A	CN 1 B
FCVIS:B	CC 1 C
FCVIS:B	CN 1 C
FCVIS:C	CC 1 C
FCVIS:C	CN 1 C
FCWB:A	GP 3 C
FCWB:B	GP 3 A
FCWB:C	GP 3 A
FRC:B1-1_1	AE 4 D
FRC:B1-1_2	BD 2 B
FRC:B1-2_1	AE 4 D
FRC:B1-2_1	BC 0 D
FRC:B1-2_2	BC 1 B
FRC:B1-3_1	AE 4 D
FRC:B1-3_1	GC 3 B
FRC:B1-3_2	GC 2 B
FRC:B1-4_1	AE 4 D
FRC:B1-4_1	IB 3 E
FRC:B1-4_2	FF 1 B
FRC:B1-4_2	IB 3 B
FRC:B1-5_1	AE 4 D
FRC:B1-5_2	BC 1 B
FRC:B1-6_1	AE 3 D
FRC:B1-6_2	BD 2 B
FRC:F1_B	BJ 0 B
FRC:F1_B	IC 2 A
FRC:F2_B	BA 1 B
FRC:F2_B	KA 1 A
FRC:F2_B	KB 2 A
FRC:F2_B	KC 0 A
FRC:F2_B	KE 1 A
FRC:F2_B	KF 2 A
FRC:F2_B	KG 0 A
FRC:F3_A	AB 3 D
FRC:F3_B	IC 1 A
FRC:F4_B	IC 3 A
FRC:F8_B	GB 3 A
FRC:F9_A	AB 3 C
FRC:F9_B	GQ 1 B
FRC:F10_B	GB 3 B
FRC:F11_B	BD 2 A
FRC:F12_B	BC 1 A
FRC:F12_B	XA 4 A
FRC:F13_B	BJ 0 B
FRC:F14_B	EB 4 A
FRC:F14_B	EH 4 A
FRC:F14_B	GJ 1 B

INLINE	PAGE
FRC:F15_B	AB 1 B
FRC:F16_B	GB 3 A
FRC:F17_A	AB 2 B
FRC:F17_B	GB 3 A
FRC:F18_B	GB 3 B
FRC:F19_B	DA 0 A
FRC:F20_B	BA 0 B
FRC:F20_B	KA 1 A
FRC:F20_B	KB 3 A
FRC:F20_B	KC 1 A
FRC:F20_B	KE 1 A
FRC:F20_B	KF 3 A
FRC:F20_B	KG 1 A
FRC:F21_A	AB 0 D
FRC:F21_B	CC 2 A
FRC:F21_B	CL 1 A
FRC:F21_B	CN 2 A
FRC:F22_A	AB 0 D
FRC:F22_B	AC 2 A
FRC:F23_B	HA 0 B
FRC:F25_B	IB 2 B
FRC:F26_A	AB 1 D
FRC:F26_B	GP 0 B
FRC:F27_B	FD 2 A
FRC:F28_B	JA 1 B
FRC:F29_B	BH 1 B
FRC:F30_B	GI 2 B
FRC:F31_A	AB 2 D
FRC:F31_B	FF 1 A
FRC:F31_B	IB 3 A
FRC:F32_B	GI 1 B
FRC:F34_B	DP 2 A
FRC:F35_A	AB 3 D
FRC:F35_B	DA 1 A
FRC:F35_B	DB 3 B
FRC:F35_B	DF 1 A
FRC:F42_B	IG 3 B
FRC:F43_B	BH 0 B
FRC:F43_B	GC 2 A
FRC:F44_A	AA 1 C
FRC:F45_B	NA 3 A
FRC:F46_B	HB 2 A
FRC:F47_B	HB 3 A
FRC:F48_B	HB 3 A
FRC:F49_B	GB 3 B
FRC:F50_B	HB 2 A
FRC:F51_A	AA 0 B
FRC:F51_B	HA 0 B
FRC:F52_B	AA 0 B
FRC:F52_B	BE 2 A

INLINE	PAGE
FRC:F52_B	BE 0 B
FRC:F52_B	BG 0 B
FRC:F53_B	IF 2 B
FRC:F54_B	EA 2 A
FRC:F54_B	EC 2 A
FRC:F54_B	EG 2 B
FRC:F55_B	JH 0 B
FRC:F56_B	CM 0 A
FRC:F57_B	JG 2 A
FRC:F57_B	JH 0 B
FRC:F58_A	AA 2 D
FRC:F58_B	GA 1 B
FRC:F59_B	BE 2 A
FRC:F59_B	BE 1 B
FRC:F59_B	BG 0 B
FRC:F60_B	HB 3 A
FRC:F61_B	BC 1 A
FRC:F62_B	GK 3 A
FRC:F62_B	GK 3 A
FRC:F62_B	GK 1 A
FRC:F63_B	FC 1 A
FRC:F64_B	BH 1 B
FRC:F65_B	BH 0 B
FRC:F66_A	AA 3 D
FRC:F66_B	BD 2 A
FRC:F67_B	EB 3 B
FRC:F67_B	EH 3 A
FRC:F67_B	JE 0 A
FRC:F67_B	JE 3 A
FRC:F68_A	AA 4 D
FRC:F68_A	DA 1 B
FRC:F68_B	DA 1 B
FRC:F69_B	DA 0 B
FRC:F77_B	IG 0 B
FRC:F78_B	IA 2 B
FRC:F79_B	IG 2 B
FRC:F80_A	AA 1 D
FRC:F80_B	IG 4 B
FRC:F81_B	NA 1 B
FRC:F82_B	IG 2 B
FRC:R2_30	AB 2 C
FRC:R2_85	AB 1 D
FRC:R2_86	AB 1 C
FRC:R2_87	AB 2 D
FRC:R3_30	IA 3 C
FRC:R3_85	IA 2 C
FRC:R3_86	IA 2 C
FRC:R3_87	IA 3 C
FRC:R4_30	IA 4 C
FRC:R4_85	IA 4 C

INLINE	PAGE
FRC:R4_86	IA 4 C
FRC:R4_87A	IA 4 C
FRC:R5_30	AB 1 C
FRC:R5_85	AB 1 D
FRC:R5_86	AB 1 C
FRC:R5_87	AB 1 D
FRC:R6_30	KE 0 B
FRC:R6_30	KF 2 B
FRC:R6_30	KG 0 B
FRC:R6_85	KE 0 B
FRC:R6_85	KF 2 A
FRC:R6_85	KG 0 A
FRC:R6_86	KE 0 B
FRC:R6_86	KF 2 B
FRC:R6_86	KG 0 B
FRC:R6_87	KE 0 B
FRC:R6_87	KF 2 A
FRC:R6_87	KG 0 A
FRC:R6_87A	KE 0 B
FRC:R6_87A	KF 2 A
FRC:R6_87A	KG 0 A
FRC:R7_30	DP 1 B
FRC:R7_85	DP 1 B
FRC:R7_86	DP 1 B
FRC:R7_87	DP 1 B
FRC:R8_30	AA 2 B
FRC:R8_85	AA 3 C
FRC:R8_86	AA 3 B
FRC:R8_87	AA 2 C
FRC:R10_30	GQ 1 C
FRC:R10_85	GQ 1 C
FRC:R10_86	GQ 1 C
FRC:R10_87	GQ 1 C
FRC:R11_30	IA 2 C
FRC:R11_85	IA 2 C
FRC:R11_85	IA 2 C
FRC:R11_85	IA 3 C
FRC:R11_85	IA 3 A
FRC:R11_86	IA 2 C
FRC:R11_87	IA 2 C
FRC:R12_30	GP 1 B
FRC:R12_85	GP 0 B
FRC:R12_86	GP 0 B
FRC:R12_87	GP 1 B
FRC:R12_87A	GP 1 B
FRC:R13_30	AI 2 D
FRC:R13_30	DB 2 B
FRC:R13_30	DF 2 B
FRC:R13_85	AI 2 D
FRC:R13_85	DB 2 B

INLINES

INLINE	PAGE
FRC:R13_85	DF 2 B
FRC:R13_86	AI 2 D
FRC:R13_86	DB 2 B
FRC:R13_86	DF 2 B
FRC:R13_87	AI 2 D
FRC:R13_87	DB 2 B
FRC:R13_87	DF 2 B
FRC:R14_30	FB 3 A
FRC:R14_30	GK 2 B
FRC:R14_30	GK 1 B
FRC:R14_85	FB 3 B
FRC:R14_85	GK 2 C
FRC:R14_85	GK 1 B
FRC:R14_86	FB 3 A
FRC:R14_86	GK 2 B
FRC:R14_86	GK 1 B
FRC:R14_87	FB 3 B
FRC:R14_87	GK 2 C
FRC:R14_87	GK 1 B
FRC:R14_87A	FB 3 B
G01_N2B:1	HI 0 A
G01_P3B:1	HI 0 B
GENIV:1	DF 4 D
GENIV:2	DF 4 D
GENIV:5	DF 4 E
GENIV:6	DF 4 E
GRDJ:1	KH 0 D
GRDJ:1	KH 2 D
GRDJ:2	KH 0 D
GRDJ:2	KH 2 D
GRDJ:3	KH 0 B
GRDJ:3	KH 2 B
GRDJ:4	KH 0 B
GRDJ:4	KH 2 B
GRDJ:6	KH 0 C
GRDJ:6	KH 2 C
GRDJ:7	KH 0 C
GRDJ:7	KH 2 C
GRDJ:8	KH 0 C
GRDJ:8	KH 2 C
GRDJ:9	KH 0 C
GRDJ:9	KH 2 C
GRDJ:10	KH 0 C
GRDJ:10	KH 2 C
GRDJ:11	KH 0 C
GRDJ:11	KH 2 C
GRDJ:12	KH 0 C
GRDJ:12	KH 2 C
GRDJ:13	KH 0 C
GRDJ:13	KH 2 C

INLINE	PAGE
GRDJ:14	KH 0 D
GRDJ:14	KH 2 D
GRDJ:15	KH 0 D
GRDJ:15	KH 2 D
GRDJ:16	KH 0 D
GRDJ:16	KH 2 D
ICAN:A	HD 0 D
ICAN:C	HD 0 D
ISOTR1:1	MC 4 E
ISOTR1:2	MC 4 D
ISOTR1:3	MC 4 E
ISOTR2:A	MC 4 D
ISOTR2:B	MC 4 D
ISOTR2:C	MC 4 D
ISOTR3:A	MC 4 E
ISX_SCR:1	CD 0 A
ISX_SCR:2	CD 0 A
ISX_SCR:4	CD 0 A
ISX_SCR:5	CD 0 A
ISX_SCR:6	CD 0 B
ISX_SCR:7	CD 0 B
ISX_SCR:8	CD 0 B
ISX_SCR:9	CD 0 B
ISX_SCR:10	CD 0 B
ISX_SCR:11	CD 0 B
ISX_SCR:12	CD 0 B
LDSPL:1	KA 4 C
LDSPL:1	KE 4 C
LDSPL:2	KA 4 C
LDSPL:2	KE 4 C
LDSPR:1	KA 4 C
LDSPR:1	KE 4 D
LDSPR:2	KA 4 D
LDSPR:2	KE 4 D
LDWSCORO:A	JG 1 B
LDWSCORO:B	JG 1 B
LDWSCORO:C	JG 1 B
LDWSCORO:D	JG 1 B
LDWSCORO:E	JG 1 C
LDWSCORO:F	JG 1 C
LDWSCORO:G	JG 3 B
LDWSCORO:H	JG 2 C
LDWSCORO:J	JG 1 C
LDWSCORO:K	JG 1 C
LKDL:A	IF 1 B
LKDL:B	IF 1 B
LKDL:C	IF 2 C
LKDL:D	IF 1 C
LKDL:E	IF 1 C
LKDR:A	IF 2 C

INLINE	PAGE
LKDR:B	IF 2 C
LKDR:C	IF 2 C
MCAD:A	AI 1 C
MCAD:B	AI 1 C
MCAD:C	AI 1 C
MCAD:D	AI 3 B
MCAD:E	AI 3 B
MCAX1:A	NA 3 B
MCAX1:B	NA 2 C
MCAX:A	NA 1 B
MCAX:B	NA 0 C
MCBB3:A	BM 1 B
MCBB3:B	BM 1 B
MCBB3:C	BM 0 D
MCBB3:D	BM 1 D
MCBB3:E	BM 4 A
MCBB3:F	BM 4 B
MCBB3:G	BM 4 C
MCBB:A	BI 1 B
MCBB:B	BI 1 B
MCBFO:A	JH 0 B
MCBFO:B	JH 1 B
MCBOC:A	GG 2 B
MCBOC:A	GG 2 B
MCBOC:A	GG 3 B
MCBOC:B	GG 2 D
MCBOC:B	GG 2 D
MCBOC:B	GG 3 D
MCCA:2	JE 0 B
MCCA:2	JE 3 B
MCCA:3	JF 3 C
MCCA:4	JF 2 C
MCCA:5	JF 2 C
MCCB:A	IG 3 C
MCCB:B	IG 3 D
MCCNG:A	BP 2 B
MCCS1:A	AI 3 B
MCCS1:A	AI 3 C
MCCS2:A	AI 3 B
MCCS2:A	AI 3 C
MCDAY:A	XC 4 D
MCDAY:A	XC 1 C
MCDAY:B	XC 4 D
MCDAY:B	XC 1 C
MCDC1:F	IA 4 E
MCDC1:G	IA 3 D
MCDC2:B	IA 4 E
MCDC2:F	IA 4 D
MCDC2:F	IA 4 D
MCDIAG2:A	XA 2 D

INLINE	PAGE
MCDIAG2:A	XA 0 A
MCDIAG2:A	XF 3 C
MCDIAG2:B	XA 1 D
MCDIAG2:B	XA 1 A
MCDIAG2:B	XF 3 C
MCDIAG2:C	XA 2 D
MCDIAG2:C	XA 0 A
MCDIAG2:C	XF 3 C
MCDIAG2:D	XA 3 D
MCDIAG2:D	XA 0 A
MCDIAG2:D	XF 3 C
MCDIAG2:E	XA 3 D
MCDIAG2:E	XA 0 A
MCDIAG2:E	XF 2 B
MCDIAG2:F	XA 0 A
MCDIAG2:F	XA 4 D
MCDIAG2:F	XF 2 B
MCDIAG2:G	XA 0 A
MCDIAG2:G	XA 4 D
MCDIAG2:G	XF 2 B
MCDIAG2:H	XA 3 E
MCDIAG2:H	XA 0 A
MCDIAG2:H	XF 3 E
MCDIAG2:K	XA 2 E
MCDIAG2:K	XA 0 A
MCDIAG2:K	XF 3 D
MCDIAG2:L	XA 4 D
MCDIAG2:L	XA 0 A
MCDIAG2:L	XF 2 B
MCDIAG2:M	XA 4 D
MCDIAG2:M	XA 0 A
MCDIAG2:M	XF 3 B
MCDIAG2:N	XF 2 B
MCDIAG2:P	XF 2 B
MCDL2:A	IC 2 B
MCDL2:B	IC 1 B
MCDL2:C	IC 1 C
MCDL2:D	IC 1 B
MCDL2:E	IC 2 B
MCDL2:F	IC 2 B
MCDL2:G	IC 2 B
MCDL2:H	IC 2 C
MCDL3:A	IC 1 B
MCDL3:B	IC 2 C
MCDL3:D	IA 1 C
MCDL3:E	IA 1 C
MCDL3:F	AE 3 E
MCDL3:G	IA 2 D
MCDL3:G	IA 3 D
MCDL3:G	IA 3 A

INLINE	PAGE
MCDL4:A	KA 1 D
MCDL4:A	KB 4 D
MCDL4:A	KC 0 E
MCDL4:A	KE 1 D
MCDL4:A	KF 4 D
MCDL4:A	KG 0 E
MCDL4:B	KA 1 D
MCDL4:B	KB 4 D
MCDL4:B	KC 0 E
MCDL4:B	KE 1 D
MCDL4:B	KF 4 D
MCDL4:B	KG 0 E
MCDR2:A	IA 2 C
MCDR2:B	AE 3 A
MCDR2:C	IA 1 C
MCDR2:D	IC 3 B
MCDR2:E	IC 2 C
MCDR2:F	IA 3 D
MCDR2:F	IA 4 D
MCDR2:F	IA 3 A
MCDR3:A	KA 1 D
MCDR3:A	KB 2 D
MCDR3:A	KC 0 E
MCDR3:A	KE 1 D
MCDR3:A	KF 2 D
MCDR3:A	KG 0 E
MCDR3:B	KA 1 D
MCDR3:B	KB 3 D
MCDR3:B	KC 0 E
MCDR3:B	KE 1 D
MCDR3:B	KF 3 D
MCDR3:B	KG 0 E
MCEB1:A	AH 3 D
MCEB1:B	AJ 1 A
MCEB1:C	AJ 1 B
MCEB1:C	AJ 2 D
MCEB1:C	AJ 2 B
MCEB1:C	AJ 1 D
MCEB1:C	AJ 4 C
MCEB1:D	AJ 1 B
MCEB1:D	AJ 4 D
MCEB1:D	AJ 2 C
MCEB1:D	AJ 1 D
MCEB1:D	AJ 4 C
MCEB1:E	AJ 3 D
MCEB1:E	AJ 1 D
MCEB1:F	AI 4 C
MCEB1:G	AI 4 C
MCEB2:A	AJ 0 A
MCEB2:A	AJ 0 B

INLINE	PAGE
MCEB2:A	AJ 4 C
MCEB2:A	AJ 2 B
MCEB2:A	AJ 3 B
MCEB2:B	AJ 0 C
MCEB2:B	AJ 0 C
MCEB2:B	AJ 4 E
MCEB2:B	AJ 2 C
MCEB2:B	AJ 3 C
MCES:A	EB 1 C
MCES:A	EH 1 C
MCES:B	EB 1 C
MCES:B	EH 1 C
MCES:C	EB 2 C
MCES:C	EH 2 C
MCES:D	EB 2 C
MCES:D	EH 2 C
MCES:E	EB 2 C
MCES:E	EH 2 D
MCES:F	EB 2 C
MCES:F	EH 2 D
MCES:G	EB 2 C
MCES:G	EH 2 D
MCES:J	EH 2 C
MCESO:A	EB 3 B
MCESO:A	EH 3 B
MCESO:A	JE 0 B
MCESO:A	JE 2 B
MCESO:B	EB 4 B
MCESO:B	EH 4 B
MCESO:C	EB 4 D
MCESO:C	EH 4 D
MCESO:D	EB 4 B
MCESO:D	EH 4 A
MCFC:1	GP 2 D
MCFC:2	GD 1 B
MCFC:3	MA 3 B
MCFC:4	GA 2 D
MCFC:5	GA 3 D
MCFC:6	GA 3 D
MCFC:7	GP 2 B
MCFC:8	MA 3 B
MCFC:14	FB 1 C
MCFC:15	FB 2 C
MCFC:16	DP 4 D
MCFC:17	GI 1 D
MCFC:18	GI 2 D
MCFC:19	GI 1 D
MCFC:20	GI 2 D
MCFC:21	EA 0 D
MCFC:21	EC 0 C

INLINES

INLINE	PAGE
MCFC:21	EG 0 C
MCFC:22	EA 0 D
MCFC:22	EC 0 C
MCFC:22	EG 0 C
MCFC:23	EA 1 D
MCFC:23	EC 4 D
MCFC:23	EG 4 D
MCFC:24	EA 1 D
MCFC:24	EC 3 D
MCFC:24	EG 4 D
MCFC:25	EA 1 D
MCFC:25	EC 0 D
MCFC:25	EG 0 D
MCFC:26	EA 1 D
MCFC:26	EC 0 D
MCFC:26	EG 0 D
MCFC:27	EA 1 D
MCFC:27	EC 0 D
MCFC:27	EG 0 D
MCFC:28	EA 1 D
MCFC:28	EC 4 D
MCFC:28	EG 4 D
MCFC:29	EA 1 D
MCFC:29	EC 4 D
MCFC:29	EG 4 D
MCFC:30	EA 2 D
MCFC:30	EC 1 C
MCFC:30	EG 1 C
MCFC:31	EA 2 D
MCFC:31	EC 1 C
MCFC:31	EG 1 C
MCFC:32	EA 2 D
MCFC:32	EC 1 C
MCFC:32	EG 1 C
MCFC:33	EA 0 C
MCFC:33	EC 0 C
MCFC:33	EG 0 C
MCFC:34	EA 0 C
MCFC:34	EC 0 C
MCFC:34	EG 0 C
MCFC:35	EA 0 C
MCFC:35	EC 0 C
MCFC:35	EG 0 C
MCFC:36	EA 1 B
MCFC:36	EC 1 C
MCFC:36	EG 1 C
MCFC:37	EA 1 B
MCFC:37	EC 1 C
MCFC:37	EG 1 C
MCFC:38	EA 1 B

INLINE	PAGE
MCFC:38	EC 1 C
MCFC:38	EG 1 C
MCFC:39	EA 1 C
MCFC:39	EC 1 C
MCFC:39	EG 1 C
MCFC:40	EA 1 C
MCFC:40	EC 1 C
MCFC:40	EG 1 C
MCFC:41	EA 1 C
MCFC:41	EC 2 C
MCFC:41	EG 2 C
MCFC:42	EA 1 C
MCFC:42	EC 2 C
MCFC:42	EG 2 C
MCFC:43	EA 3 D
MCFC:43	EC 2 D
MCFC:43	EG 2 C
MCFC:44	EA 3 D
MCFC:44	EC 2 D
MCFC:44	EG 2 C
MCFC:45	XA 0 D
MCFC:46	XA 0 D
MCFC:47	BB 0 C
MCFC:48	BA 4 C
MCFC:49	BA 3 C
MCFC:50	AI 2 C
MCFC:51	BA 4 C
MCFC:52	CB 1 B
MCFC:53	BB 1 C
MCFC:54	AG 1 B
MCFC:55	BA 2 E
MCFC:56	BA 3 D
MCFC:57	BB 1 C
MCFC:58	HA 1 B
MCFC:59	FC 1 C
MCFC:59	FC 1 C
MCFC:59	FC 3 C
MCFC:60	FD 3 C
MCFC:60	FD 3 C
MCFC:60	FD 3 C
MCFC:61	AC 2 B
MCFC:62	FD 1 C
MCFC:62	FD 1 C
MCFC:62	FD 2 C
MCFC:63	FC 2 C
MCFC:63	FC 3 C
MCFC:63	FC 2 C
MCFC:64	GB 1 C
MCFC:65	GB 1 C
MCFC:66	AG 1 C

INLINE	PAGE
MCFC:67	GB 2 D
MCFC:68	BA 3 B
MCFC:69	GP 2 A
MCFC:70	GQ 1 D
MCFC:71	AG 0 B
MCFC:72	GQ 2 D
MCFC:72	GQ 2 D
MCFC:72	GQ 3 D
MCFC:73	GQ 2 B
MCFC:73	GQ 3 B
MCFC:73	GQ 2 B
MCFC:74	GE 2 B
MCFC:74	GE 2 B
MCFC:74	GE 3 B
MCFC:75	GE 1 B
MCFC:75	GE 1 B
MCFC:75	GE 2 B
MCFC:76	GD 2 B
MCFC:77	GD 1 B
MCFC:78	GD 0 B
MCFC:79	GD 0 B
MCFC:80	GD 1 B
MCFC:81	GD 1 B
MCFC:82	EA 2 B
MCFC:82	EC 2 B
MCFC:82	EG 2 B
MCFC:83	XB 3 C
MCFC:83	XD 1 C
MCFC:83	XE 1 B
MCFC:83	XE 1 C
MCFC:83	XE 1 D
MCFC:84	XB 3 C
MCFC:84	XD 1 C
MCFC:84	XE 1 B
MCFC:84	XE 1 C
MCFC:84	XE 1 D
MCFC:85	EA 2 D
MCFC:85	EC 1 D
MCFC:85	EG 1 C
MCFC:86	EA 2 D
MCFC:86	EC 1 D
MCFC:86	EG 1 C
MCFC:87	EA 3 D
MCFC:87	EC 2 D
MCFC:87	EG 2 D
MCFC:88	EA 3 D
MCFC:88	EC 2 D
MCFC:88	EG 3 D
MCFC:89	EA 3 D
MCFC:89	EC 2 D

INLINE	PAGE
MCFC:89	EG 2 D
MCFC:90	EA 4 D
MCFC:90	EC 2 D
MCFC:90	EG 2 D
MCFC:91	EA 4 D
MCFC:91	EC 2 D
MCFC:91	EG 2 D
MCFC:92	EA 3 D
MCFC:92	EC 2 D
MCFC:92	EG 2 D
MCFC:93	ED 0 B
MCFC:94	ED 0 B
MCFC:95	ED 4 B
MCFC:96	ED 4 B
MCFC:97	ED 1 C
MCFC:98	ED 1 C
MCFC:99	ED 1 C
MCFC:100	ED 1 C
MCFC:101	ED 4 B
MCFC:102	EC 3 D
MCFC:102	EG 3 C
MCFC:103	XF 1 B
MCFC:104	XF 1 B
MCFC:107	FF 1 C
MCFC:108	FF 1 C
MCFC:109	BH 0 C
MCFC:110	FB 1 C
MCFC:111	CH 3 C
MCFC:112	BH 2 D
MCFC:113	BH 3 D
MCFC:114	DP 1 C
MCFC:115	BI 1 B
MCFC:115	BM 1 B
MCFC:116	AF 1 C
MCFC:117	GK 4 C
MCFC:117	GK 2 C
MCFC:117	GK 1 C
MCFC:118	CC 2 B
MCFC:118	CL 1 B
MCFC:118	CN 2 B
MCFC:119	GP 2 A
MCFC:124	GP 1 C
MCFC:125	GP 1 D
MCFC:126	NA 1 D
MCFC:127	NA 1 D
MCFC:128	NA 3 D
MCFCOPT:1	JE 0 C
MCFCOPT:1	JE 3 C
MCFCOPT:2	CM 3 C
MCFCOPT:3	CM 1 D

INLINE	PAGE
MCFCOPT:5	CM 3 C
MCFCOPT:6	BP 2 D
MCFCOPT:7	BP 2 C
MCFCOPT:9	JF 2 B
MCFCOPT:10	JF 2 B
MCFCOPT:11	JF 2 B
MCFCOPT:12	JE 3 A
MCFCOPT:13	JE 3 A
MCFCOPT:15	EB 2 D
MCFCOPT:15	EH 2 D
MCFCOPT:16	EB 2 D
MCFCOPT:16	EH 2 D
MCFCOPT:17	EB 2 D
MCFCOPT:17	EH 2 D
MCFCOPT:18	EB 1 B
MCFCOPT:18	EH 1 B
MCFCOPT:19	EB 1 B
MCFCOPT:19	EH 1 B
MCFCOPT:21	EB 2 B
MCFCOPT:21	EH 2 B
MCFCOPT:22	EB 2 B
MCFCOPT:22	EH 2 B
MCFCOPT:23	EH 2 B
MCGR:A1	KH 1 B
MCGR:A1	KH 3 B
MCGR:A1	XC 1 D
MCGR:A1	XC 0 B
MCGR:A2	KH 1 B
MCGR:A2	KH 3 B
MCGR:A2	XC 1 D
MCGR:A2	XC 1 B
MCGR:A3	KE 1 B
MCGR:A3	KF 3 B
MCGR:A3	KG 2 A
MCGR:A3	KH 1 B
MCGR:A3	KH 3 B
MCGR:A4	KE 1 B
MCGR:A4	KF 2 B
MCGR:A4	KG 0 B
MCGR:A4	KH 1 B
MCGR:A4	KH 3 B
MCGR:A6	KE 1 B
MCGR:A6	KF 3 B
MCGR:A6	KG 2 A
MCGR:A6	KH 1 C
MCGR:A6	KH 3 C
MCGR:A7	BA 0 B
MCGR:A7	KE 1 B
MCGR:A7	KF 2 B
MCGR:A7	KG 1 A

INLINE	PAGE
MCGR:A7	KH 1 C
MCGR:A7	KH 3 C
MCGR:A8	KE 2 C
MCGR:A8	KF 4 D
MCGR:A8	KH 1 C
MCGR:A8	KH 3 C
MCGR:B1	KE 1 C
MCGR:B1	KF 2 D
MCGR:B1	KG 1 D
MCGR:B1	KH 1 C
MCGR:B1	KH 3 C
MCGR:B2	KE 1 C
MCGR:B2	KF 3 D
MCGR:B2	KG 1 D
MCGR:B2	KH 1 C
MCGR:B2	KH 3 C
MCGR:B3	KE 1 C
MCGR:B3	KF 2 D
MCGR:B3	KG 1 D
MCGR:B3	KH 1 C
MCGR:B3	KH 3 C
MCGR:B4	KE 1 C
MCGR:B4	KF 2 D
MCGR:B4	KG 2 D
MCGR:B4	KH 1 C
MCGR:B4	KH 3 C
MCGR:B5	KE 2 C
MCGR:B5	KF 3 D
MCGR:B5	KG 1 D
MCGR:B5	KH 1 C
MCGR:B5	KH 3 C
MCGR:B6	KE 2 C
MCGR:B6	KF 3 D
MCGR:B6	KG 1 D
MCGR:B6	KH 1 D
MCGR:B6	KH 3 D
MCGR:B7	KE 1 C
MCGR:B7	KF 4 D
MCGR:B7	KG 0 D
MCGR:B7	KH 1 D
MCGR:B7	KH 3 D
MCGR:B8	KE 1 C
MCGR:B8	KF 4 D
MCGR:B8	KG 0 D
MCGR:B8	KH 1 D
MCGR:B8	KH 3 D
MCGRB:4	KH 1 B
MCGRB:4	KH 3 B
MCGRD:15	KH 1 E
MCGRD:15	KH 3 E

INLINES

INLINE	PAGE
MCGRD:16	KH 1 E
MCGRD:16	KH 3 E
MCIS1:A	DA 1 D
MCIS1:B	DA 1 D
MCIS1:C	DA 1 D
MCIS1:D	DA 1 D
MCIS1:E	DA 0 D
MCIS1:F	DA 0 D
MCIS1:G	DA 0 D
MCIS1:H	DA 0 D
MCIS1:J	DA 0 D
MCIS1:K	DA 0 D
MCIS:A	DA 3 D
MCIS:A	DA 1 D
MCIS:B	DA 2 D
MCIS:B	DA 1 D
MCIS:C	DA 2 D
MCIS:C	DA 1 D
MCIS:D	DA 2 D
MCIS:D	DA 1 D
MCIS:E	DA 2 D
MCIS:E	DA 0 D
MCIS:F	DA 2 D
MCIS:F	DA 0 D
MCIS:G	DA 2 D
MCIS:G	DA 0 D
MCIS:H	DA 2 D
MCIS:H	DA 0 D
MCIS:J	DA 2 D
MCIS:J	DA 0 D
MCIS:K	DA 2 D
MCIS:K	DA 0 D
MCIS:L	DA 2 D
MCIS:M	DA 1 D
MCIS:N	DA 1 D
MCLA:A	FB 3 B
MCLA:B	FB 1 C
MCLA:C	FB 1 C
MCLA:D	FB 2 C
MCLA:F	FB 0 B
MCLA:G	FB 0 C
MCLD:A	KA 2 B
MCLD:A	KE 2 B
MCLD:A	KE 2 B
MCLD:B	JG 2 B
MCLD:B	JH 0 B
MCLD:C	JG 2 D
MCLD:C	JH 0 D
MCLK:A	IF 2 B
MCLK:B	IF 2 B

INLINE	PAGE
MCLK:C	IF 2 B
MCLK:D	IF 2 B
MCLK:E	IF 2 B
MCMC2:C	AH 3 C
MCMC2:C	AH 3 C
MCMC2:C	AH 3 C
MCMC3:A	BB 1 D
MCMC3:B	BB 1 D
MCMC3:C	BB 1 D
MCMC3:E	BB 1 D
MCMC3:E	GA 3 B
MCMC3:E	JD 3 D
MCMC3:F	BB 1 D
MCMC3:F	GA 3 C
MCMC3:F	JD 2 D
MCMC3:G	BB 1 D
MCMC3:G	GA 3 C
MCMC3:H	JD 2 B
MCMC4:A	DP 1 C
MCMC4:A	DP 1 C
MCMC4:B	DP 3 A
MCMC4:C	DP 3 D
MCMC4:D	DP 4 C
MCMD:A	CM 0 B
MCMD:B	CM 0 D
MCMD:C	CM 0 D
MCMI:E	JD 3 D
MCMI:F	JD 2 D
MCMI:H	JD 2 B
MCMJ1:1	IC 3 B
MCMJ1:2	IC 4 B
MCMJ1:3	IC 3 D
MCMJ1:4	IC 3 B
MCMJ1:5	IC 3 B
MCMJ2:1	IC 1 B
MCMJ2:2	IC 0 B
MCMJ2:3	IC 0 D
MCMJ2:4	IC 1 B
MCMJ2:5	IC 1 B
MCML1:A	IE 2 B
MCML1:A	IE 2 B
MCML1:B	IE 2 D
MCML1:B	IE 2 D
MCML2:A	IE 2 B
MCML2:A	IE 2 B
MCML2:B	IE 2 D
MCML2:B	IE 2 D
MCMM:A	BG 0 B
MCMM:C	BG 0 B
MCOF1:A	IA 0 C

INLINE	PAGE
MCOF1:B	IA 0 C
MCOF1:C	GC 2 B
MCOF1:C	GC 2 C
MCOF1:D	AE 3 A
MCOF1:E	IA 0 C
MCPL2:A	GI 2 C
MCPL2:B	GI 1 C
MCPL2:C	GI 2 C
MCPL2:D	GI 1 C
MCPL:A	GI 3 C
MCPL:B	GI 1 D
MCPL:C	GI 3 C
MCPL:D	GI 2 B
MCPL:E	GI 2 B
MCPL:F	GI 1 B
MCPL:G	GI 0 D
MCPL:H	GJ 1 B
MCPTO1:A	DP 1 C
MCPTO1:B	DP 3 A
MCPTO1:C	DP 3 D
MCPTO1:D	DP 4 C
MCPTO2:A	DP 1 C
MCPW:F	IA 3 A
MCQC:A	BE 2 B
MCQC:A	BE 1 B
MCQC:C	BE 2 C
MCQC:C	BE 0 B
MCRAD1:A	KB 3 B
MCRAD1:A	KC 3 A
MCRAD1:B	KB 4 B
MCRAD1:B	KC 3 A
MCRJ2:A	KB 1 C
MCRJ2:A	KC 2 C
MCRJ2:A	KF 1 C
MCRJ2:A	KG 2 C
MCRJ2:B	KB 1 C
MCRJ2:B	KC 2 C
MCRJ2:B	KF 1 C
MCRJ2:B	KG 2 C
MCRJ2:C	KB 1 C
MCRJ2:C	KC 3 C
MCRJ2:C	KF 1 C
MCRJ2:C	KG 3 C
MCRJ2:D	KB 1 D
MCRJ2:D	KC 3 C
MCRJ2:D	KF 1 D
MCRJ2:D	KG 3 C
MCRJ:1	KB 2 D
MCRJ:1	KC 1 D
MCRJ:1	KF 2 D

INLINE	PAGE
MCRJ:1	KG 1 D
MCRJ:2	KB 3 D
MCRJ:2	KC 1 D
MCRJ:2	KF 3 D
MCRJ:2	KG 1 D
MCRJ:3	KF 4 B
MCRJ:3	KG 0 D
MCRJ:4	KF 4 B
MCRJ:4	KG 0 D
MCRJ:5	KB 2 D
MCRJ:5	KC 1 D
MCRJ:5	KF 2 D
MCRJ:5	KG 1 D
MCRJ:6	KB 2 D
MCRJ:6	KC 2 D
MCRJ:6	KF 2 D
MCRJ:6	KG 2 D
MCRJ:7	KB 3 B
MCRJ:7	KC 2 A
MCRJ:7	KF 3 B
MCRJ:7	KG 2 A
MCRJ:8	KB 2 B
MCRJ:8	KC 0 B
MCRJ:8	KF 2 B
MCRJ:8	KG 0 B
MCRJ:9	KB 3 D
MCRJ:9	KC 1 D
MCRJ:9	KF 3 D
MCRJ:9	KG 1 D
MCRJ:10	KB 3 D
MCRJ:10	KC 1 D
MCRJ:10	KF 3 D
MCRJ:10	KG 1 D
MCRJ:12	KB 3 B
MCRJ:12	KC 2 A
MCRJ:12	KF 3 B
MCRJ:12	KG 2 A
MCRJ:13	KB 4 D
MCRJ:13	KC 0 D
MCRJ:13	KF 4 D
MCRJ:13	KG 0 D
MCRJ:14	KB 4 D
MCRJ:14	KC 1 D
MCRJ:14	KF 4 D
MCRJ:14	KG 1 D
MCRJ:15	KB 2 B
MCRJ:15	KC 1 A
MCRJ:15	KF 2 B
MCRJ:15	KG 1 B
MCRJ:16	KB 4 D

INLINE	PAGE
MCRJ:16	KC 3 C
MCRJ:16	KF 4 D
MCRJ:16	KG 3 C
MCRJA:3	KA 1 B
MCRJA:3	KB 3 B
MCRJA:3	KC 2 A
MCRJA:4	KA 1 B
MCRJA:4	KB 2 B
MCRJA:4	KC 0 B
MCRJA:6	KA 1 B
MCRJA:6	KB 3 B
MCRJA:6	KC 2 A
MCRJA:7	KA 1 B
MCRJA:7	KB 2 B
MCRJA:7	KC 1 A
MCRJA:8	KA 2 D
MCRJA:8	KB 4 D
MCRJA:8	KC 3 C
MCRJA:8	KG 3 C
MCRJB:1	KA 1 D
MCRJB:1	KB 2 D
MCRJB:1	KC 1 D
MCRJB:2	KA 1 D
MCRJB:2	KB 3 D
MCRJB:2	KC 1 D
MCRJB:3	KA 1 D
MCRJB:3	KB 2 D
MCRJB:3	KC 1 D
MCRJB:4	KA 1 D
MCRJB:4	KB 2 D
MCRJB:4	KC 2 D
MCRJB:5	KA 2 D
MCRJB:5	KB 3 D
MCRJB:5	KC 1 D
MCRJB:6	KA 2 D
MCRJB:6	KB 3 D
MCRJB:6	KC 1 D
MCRJB:7	KA 1 D
MCRJB:7	KB 4 D
MCRJB:7	KC 0 D
MCRJB:8	KA 1 D
MCRJB:8	KB 4 D
MCRJB:8	KC 0 D
MCRMO:A	CM 2 C
MCRMO:B	CM 2 C
MCRMO:C	CM 1 C
MCRR:1	BC 3 B
MCRR:2	BC 3 B
MCRR:5	BC 3 B
MCRR:6	BC 3 C

INLINE	PAGE
MCRR:7	BC 3 C
MCRR:8	BC 3 B
MCRR:9	BC 3 C
MCRR:10	BC 3 C
MCRR:12	BC 3 B
MCRR:13	BC 3 C
MCRR:14	BC 3 C
MCRR:15	BC 3 B
MCRR:16	BC 3 B
MCRS:A	IG 2 C
MCRS:B	IG 2 C
MCRSO:A	GC 2 B
MCRSO:B	GC 1 B
MCRSO:C	GC 2 B
MCRSO:D	GC 1 B
MCRSO:E	GC 1 B
MCRWJ:A	KB 1 D
MCRWJ:A	KF 1 D
MCRWJ:B	KB 1 D
MCRWJ:B	KF 1 D
MCRWJ:C	KB 1 D
MCRWJ:C	KF 1 D
MCRWJ:D	KB 1 D
MCRWJ:D	KF 1 D
MCRWJ:E	GG 1 B
MCRWJ:F	GG 1 D
MCSL1:A	KB 0 D
MCSL1:A	KB 1 D
MCSL1:A	KB 1 B
MCSL1:A	KC 2 C
MCSL1:A	KC 4 C
MCSL1:A	KC 4 D
MCSL1:A	KF 0 D
MCSL1:A	KF 1 D
MCSL1:A	KF 1 B
MCSL1:A	KG 4 D
MCSL1:A	KG 2 C
MCSL1:A	KG 4 C
MCSL1:B	KB 0 D
MCSL1:B	KB 1 D
MCSL1:B	KB 1 B
MCSL1:B	KC 2 C
MCSL1:B	KC 4 C
MCSL1:B	KC 4 D
MCSL1:B	KF 1 B
MCSL1:B	KF 0 D
MCSL1:B	KF 1 D
MCSL1:B	KG 4 D
MCSL1:B	KG 4 C
MCSL1:B	KG 2 C

INLINES

INLINE	PAGE
MCSL1:C	KB 0 D
MCSL1:C	KB 1 D
MCSL1:C	KB 0 B
MCSL1:C	KC 3 C
MCSL1:C	KC 4 C
MCSL1:C	KC 4 D
MCSL1:C	KF 0 B
MCSL1:C	KF 0 D
MCSL1:C	KF 1 D
MCSL1:C	KG 3 C
MCSL1:C	KG 4 C
MCSL1:C	KG 4 D
MCSL1:D	KB 0 D
MCSL1:D	KB 1 D
MCSL1:D	KB 0 B
MCSL1:D	KC 3 C
MCSL1:D	KC 4 C
MCSL1:D	KC 4 D
MCSL1:D	KF 1 D
MCSL1:D	KF 0 B
MCSL1:D	KF 0 D
MCSL1:D	KG 4 D
MCSL1:D	KG 3 C
MCSL1:D	KG 4 C
MCSL1:E	GG 1 B
MCSL1:E	GH 2 B
MCSL1:E	GH 0 B
MCSL1:F	GG 1 E
MCSL1:F	GH 2 D
MCSL1:F	GH 0 E
MCSL2:A	HB 0 C
MCSL2:B	HB 0 C
MCSL2:C	HB 2 C
MCSL2:D	HB 2 C
MCSL2:F	HB 3 B
MCSL2:G	HD 0 B
MCSL2:G	HE 2 D
MCSL2:G	HH 2 D
MCSL2:H	HD 0 B
MCSL2:H	HE 2 D
MCSL2:H	HH 2 D
MCSL2:J	HB 1 B
MCSL2:K	AH 3 B
MCSL3:A	HB 2 D
MCSL3:B	HD 1 D
MCSL3:B	HE 1 D
MCSL3:B	HH 1 D
MCSL3:C	HD 1 E
MCSL3:C	HE 2 D
MCSL3:C	HH 2 D

INLINE	PAGE
MCSL3:D	IG 3 B
MCSL3:E	IG 4 B
MCSL3:F	HB 2 B
MCSL3:G	HB 3 B
MCSL3:H	HB 3 B
MCSL5:A	XC 3 A
MCSL5:A	XC 4 D
MCSL5:A	XC 1 A
MCSL5:A	XC 1 C
MCSL5:B	XC 3 A
MCSL5:B	XC 4 D
MCSL5:B	XC 1 B
MCSL5:B	XC 1 C
MCSL5:C	HB 3 C
MCSL5:D	HB 2 B
MCSL5:E	HB 3 C
MCSR1:A	GA 1 D
MCSR1:A	IE 2 C
MCSR1:A	IE 2 C
MCSR1:A	IE 2 B
MCSR1:B	GA 1 E
MCSR1:B	IE 2 D
MCSR1:B	IE 2 D
MCSR1:B	IE 2 D
MCSR2:A	GA 2 D
MCSR2:A	IE 2 B
MCSR2:B	GA 2 E
MCSR2:B	IE 2 D
MCST1:A	DB 0 C
MCST1:B	DB 0 B
MCST1:C	DB 0 B
MCST1:D	DB 0 B
MCST1:E	DB 0 B
MCST2:A	DA 1 D
MCST2:B	DA 1 D
MCST2:C	DA 1 D
MCST2:D	DA 1 D
MCST2:E	DA 0 D
MCST2:F	DA 0 D
MCST2:G	DA 0 D
MCST2:H	DA 0 D
MCST2:J	DA 0 D
MCST2:K	DA 0 D
MCST3:A	DF 1 D
MCST3:B	DF 1 D
MCST3:C	DF 0 D
MCST3:D	DF 0 D
MCST3:E	DF 1 D
MCST3:F	DF 1 D
MCST3:G	DF 1 D

INLINE	PAGE
MCST3:H	DF 2 E
MCST3:J	DF 2 D
MCSW2:E	BB 1 D
MCSW2:F	BB 1 D
MCSW2:G	BB 1 D
MCSW:A	BB 1 D
MCSW:B	BB 1 D
MCSW:C	BB 1 D
MCTL:A	FF 1 C
MCTL:B	FF 1 C
MCTLK1:C	AH 4 C
MCTLK2:C	AH 4 B
MCTR1:A	DB 3 B
MCTR1:B	BA 4 D
MCTR1:C	BA 4 E
MCTR1:D	DB 2 D
MCTR1:E	DB 2 E
MCTR1:F	GK 4 B
MCTR1:F	GK 2 B
MCTR1:G	GK 3 B
MCTR1:G	GK 3 B
MCTR2:1	DB 2 C
MCTR2:2	DB 2 C
MCTR2:3	DB 1 C
MCTR2:4	DB 1 C
MCTR2:5	DB 2 E
MCTR2:6	DB 2 D
MCTR2:7	DB 2 D
MCTR2:10	DB 2 C
MCTR2:11	DB 2 C
MCTR2:12	DB 2 C
MCTR2:13	DB 2 C
MCTR2:14	DB 2 C
MCTR3:1	DP 0 C
MCTR3:2	DA 1 C
MCTR3:3	AI 1 C
MCTR3:4	AI 1 C
MCTR3:5	DP 0 B
MCTR3:6	DP 0 C
MCTR3:7	DA 2 B
MCTR3:7	DA 3 D
MCTR3:9	XA 1 E
MCTR3:10	XA 1 D
MCTR3:11	XA 1 E
MCTR3:12	XA 1 D
MCTR3:13	DA 2 B
MCTR3:13	DA 3 D
MCTR3:14	DA 2 B
MCTR3:14	DA 3 D
MCTR4:1	DF 0 B

INLINE	PAGE
MCTR4:2	DE 1 C
MCTR4:3	DE 2 C
MCTR4:4	DE 2 C
MCTR4:5	DE 2 C
MCTR4:6	DE 2 C
MCTR4:7	DF 0 B
MCTR4:8	DE 2 C
MCTR4:9	DE 2 C
MCTR4:10	DE 2 C
MCTR4:11	DE 2 C
MCTR4:12	DE 3 C
MCTR4:13	DE 3 C
MCTR4:14	DE 0 C
MCTR5:1	DE 0 C
MCTR5:2	DE 0 C
MCTR5:3	DE 1 B
MCTR5:4	DE 1 C
MCTR5:5	DE 1 C
MCTR5:6	DE 0 C
MCTR5:7	DE 0 C
MCTR5:8	DE 1 C
MCTR5:9	DE 1 C
MCTR5:10	DE 1 C
MCTR5:11	DE 0 C
MCTR5:12	DE 0 C
MCTR5:13	DE 1 C
MCTR5:14	DE 1 C
MCTR6:A	AI 0 C
MCTR6:B	AI 0 C
MCTT:A	BE 4 B
MCVL2:A	BJ 0 C
MCVL2:A	BJ 2 C
MCVL2:B	BJ 0 C
MCVL2:B	BJ 3 C
MCVL2:C	BJ 1 C
MCVL2:C	BJ 3 C
MCVL2:D	BJ 1 C
MCVL2:D	BJ 3 C
MCVL:A	BE 2 B
MCVL:A	BG 0 B
MCVL:A	BJ 0 B
MCVL:B	BJ 0 C
MCVL:B	BJ 2 C
MCVL:C	BE 2 B
MCVL:C	BE 2 B
MCVL:C	BG 0 B
MCVL:C	BJ 0 B
MDCNG:A	BP 2 C
MDCNG:B	BP 2 C
MFA07A:1	KD 1 B

INLINE	PAGE
MFA07A:2	KD 1 B
MFA07A:3	BC 4 C
MFA07A:3	KA 1 B
MFA07A:3	KB 3 B
MFA07A:3	KC 1 B
MFA07A:4	BC 4 B
MFA07A:4	KA 1 B
MFA07A:4	KB 2 B
MFA07A:4	KC 1 B
MFA07A:6	BC 4 B
MFA07A:6	KA 1 B
MFA07A:6	KB 3 B
MFA07A:6	KC 1 B
MFA07A:7	BC 4 B
MFA07A:7	KA 1 B
MFA07A:7	KB 2 B
MFA07A:7	KC 1 B
MFA07A:8	BC 4 B
MFA07A:8	KA 2 C
MFA07A:8	KC 3 B
MFA07B:1	BC 4 B
MFA07B:1	KA 1 C
MFA07B:1	KB 3 C
MFA07B:1	KC 2 B
MFA07B:2	BC 4 B
MFA07B:2	KA 1 C
MFA07B:2	KB 3 C
MFA07B:2	KC 3 B
MFA07B:3	BC 4 B
MFA07B:3	KA 1 C
MFA07B:3	KB 3 C
MFA07B:3	KC 1 B
MFA07B:4	BC 4 C
MFA07B:4	KA 1 C
MFA07B:4	KB 3 C
MFA07B:4	KC 1 B
MFA07B:5	BC 4 C
MFA07B:5	KA 2 C
MFA07B:5	KB 3 C
MFA07B:5	KC 1 B
MFA07B:6	BC 4 C
MFA07B:6	KA 2 C
MFA07B:6	KB 3 C
MFA07B:6	KC 1 B
MFA07B:7	BC 4 C
MFA07B:7	KA 1 C
MFA07B:7	KB 2 C
MFA07B:7	KC 1 B
MFA07B:8	BC 4 C
MFA07B:8	KA 1 C

INLINE	PAGE
MFA07B:8	KB 2 C
MFA07B:8	KB 4 C
MFA07B:8	KC 2 B
MFMIC:1	KD 1 B
MFMIC:1	KD 3 B
MFMIC:2	KD 1 B
MFMIC:2	KD 3 B
MORM:A	CM 1 B
MORM:B	CM 0 C
OBTBJ:A	HD 3 C
OBTBJ:C	HD 3 E
OCPEN2:A	AF 4 D
OCPEN2:C	AF 4 D
OCPEN2:D	AF 4 D
OCPFC:A	AF 4 D
OCPFC:C	AF 4 D
OCPFC:D	AF 4 D
OCSW:A	AM 2 B
OCSW:B	AM 2 C
OCSW:C	AM 2 C
OCSW:D	AM 2 D
OFLJ:A	IA 1 B
OFLJ:B	IA 0 B
OFLJ:C	IA 0 B
OFRFJ:A	GC 1 C
OFRFJ:B	GC 1 D
OFSL:A	KC 2 D
OFSL:A	KG 2 D
OFSL:B	KC 2 D
OFSL:B	KG 2 D
OFSL:C	KC 2 D
OFSL:C	KG 2 D
OFSL:D	KC 2 D
OFSL:D	KG 2 D
OFSL:E	KC 2 D
OFSL:E	KG 3 D
OFSL:F	KC 3 D
OFSL:F	KG 3 D
OFSL:G	KC 3 D
OFSL:G	KG 3 D
OFSL:H	KC 3 D
OFSL:H	KG 3 D
OFSV1:1	GC 4 A
OFSV1:2	GC 4 B
OFSV2:1	GC 4 A
OFSV2:2	GC 4 B
OFSV3:1	GC 3 A
OFSV3:2	GC 3 B
OFSV:1	GC 3 C
OFSV:2	GC 3 D

INLINES

INLINE	PAGE
OLHW:A	IB 4 D
OLHW:B	IB 4 D
OLMM:A	BG 0 B
OPT1:A	BG 2 C
OPT1:B	BG 2 C
OPT3:A	BI 3 A
OPT3:A	BM 3 A
OPT3:B	BI 3 A
OPT3:B	BM 3 A
OPT4:A	BE 3 D
OPT4:A	BE 1 D
OPT4:B	BE 3 D
OPT4:B	BE 1 D
OPT5:1	XB 0 A
OPT5:1	XB 0 B
OPT5:1	XB 0 B
OPT5:1	XB 0 C
OPT5:1	XB 0 C
OPT5:1	XB 0 D
OPT5:1	XB 1 B
OPT5:2	XB 0 B
OPT5:2	XB 0 A
OPT5:2	XB 0 B
OPT5:2	XB 0 C
OPT5:2	XB 0 C
OPT5:2	XB 0 D
OPT5:2	XB 1 B
OPT7:A	EB 3 B
OPT7:A	EH 3 B
OPT7:B	EB 2 B
OPT7:B	EH 2 B
OPT8:A	BD 2 D
OPT8:B	BD 2 D
OPT9:1	CK 4 A
OPT9:2	CK 4 B
OPT1587:A	XA 3 B
OPT1587:A	XA 3 B
OPT1587:B	XA 2 B
OPT1587:B	XA 2 B
OPT1587_12:A	BG 4 B
OPT1587_12:B	BG 4 B
OPT1587_13:A	BG 4 C
OPT1587_13:B	BG 4 C
OPT1587GO:A	XA 3 B
OPT1587GO:B	XA 2 B
OPT1587GOOC:A	BJ 1 B
OPT1587GOOC:A	BJ 4 C
OPT1587GOOC:B	BJ 1 A
OPT1587GOOC:B	BJ 4 C
PLSPO:A	GJ 1 D

INLINE	PAGE
PLSPO:A	GJ 1 E
PLSPO:B	GJ 1 C
PLSPO:B	GJ 1 C
PSOF2:A	KC 1 D
PSOF2:A	KG 1 D
PSOF2:B	KC 1 D
PSOF2:B	KG 1 D
PSOF2:C	KC 1 D
PSOF2:C	KG 1 D
PSOF2:D	KC 2 D
PSOF2:D	KG 2 D
PSOF2:E	KC 0 D
PSOF2:E	KG 0 D
PSOF2:F	KC 1 D
PSOF2:F	KG 1 D
PSOF2:G	KC 1 D
PSOF2:G	KG 1 D
PSOF2:H	KC 1 D
PSOF2:H	KG 1 D
PSOF:A	KC 2 C
PSOF:A	KG 2 C
PSOF:B	KC 2 C
PSOF:B	KG 2 C
PSOF:C	KC 2 C
PSOF:C	KG 2 C
PSOF:D	KC 3 C
PSOF:D	KG 3 C
PSOF:E	KC 1 C
PSOF:E	KG 1 C
PSOF:F	KC 1 C
PSOF:F	KG 1 C
PSOF:G	KC 1 C
PSOF:G	KG 1 C
PSOF:H	KC 1 C
PSOF:H	KG 1 C
PSOF:J	KC 0 C
PSOF:J	KG 0 C
PTBFO:A	JH 1 D
PTBFO:B	JH 1 D
PWDR:F	IA 4 A
R08Q:1	BG 4 A
R08Q:2	BG 4 B
R08QT:1	BG 4 B
R08QT:2	BG 4 B
R21_TGW_OL:A	BJ 1 B
R21_TGW_OL:B	BJ 1 B
RADLR:A	BB 1 B
RADLR:A	BB 2 B
RADLR:A	BB 2 B
RADLR:B	BB 1 B

INLINE	PAGE
RADLR:B	BB 2 B
RADLR:B	BB 2 B
RFJRF:A	GC 0 C
RFJRF:B	GC 0 D
RJMF:1	BC 3 B
RJMF:1	KA 1 D
RJMF:1	KB 3 C
RJMF:1	KC 2 B
RJMF:2	BC 3 B
RJMF:2	KA 1 D
RJMF:2	KB 3 C
RJMF:2	KC 3 B
RJMF:5	BC 3 B
RJMF:5	KA 1 D
RJMF:5	KB 3 C
RJMF:5	KC 1 B
RJMF:6	BC 3 C
RJMF:6	KA 1 D
RJMF:6	KB 3 C
RJMF:6	KC 1 B
RJMF:7	BC 3 C
RJMF:7	KA 1 B
RJMF:7	KB 3 B
RJMF:7	KC 1 A
RJMF:8	BC 3 B
RJMF:8	KA 1 B
RJMF:8	KB 2 B
RJMF:8	KC 1 A
RJMF:9	BC 3 C
RJMF:9	KA 2 D
RJMF:9	KB 3 C
RJMF:9	KC 1 B
RJMF:10	BC 3 C
RJMF:10	KA 2 D
RJMF:10	KB 3 C
RJMF:10	KC 1 B
RJMF:12	BC 3 B
RJMF:12	KA 1 B
RJMF:12	KB 3 B
RJMF:12	KC 1 A
RJMF:13	BC 3 C
RJMF:13	KA 1 D
RJMF:13	KB 2 C
RJMF:13	KC 1 B
RJMF:14	BC 3 C
RJMF:14	KA 1 D
RJMF:14	KB 2 C
RJMF:14	KC 2 B
RJMF:15	BC 3 B
RJMF:15	KA 1 B

INLINE	PAGE
RJMF:15	KB 2 B
RJMF:15	KC 1 A
RJMF:16	BC 3 B
RJMF:16	KA 2 D
RJMF:16	KB 4 C
RJMF:16	KC 3 B
RJMFA:1	KF 4 B
RJMFA:1	KG 0 C
RJMFA:2	KF 4 B
RJMFA:2	KG 0 C
RJMFA:3	KB 3 B
RJMFA:3	KC 1 A
RJMFA:3	KF 3 B
RJMFA:3	KG 1 B
RJMFA:4	KB 2 B
RJMFA:4	KC 1 A
RJMFA:4	KF 2 B
RJMFA:4	KG 1 B
RJMFA:6	KB 3 B
RJMFA:6	KC 1 A
RJMFA:6	KF 3 B
RJMFA:6	KG 1 B
RJMFA:7	KB 2 B
RJMFA:7	KC 1 A
RJMFA:7	KF 2 B
RJMFA:7	KG 1 B
RJMFA:8	KB 4 C
RJMFA:8	KC 3 C
RJMFA:8	KF 4 C
RJMFA:8	KG 3 C
RJMFB:1	KB 3 C
RJMFB:1	KC 2 C
RJMFB:1	KF 3 C
RJMFB:1	KG 2 C
RJMFB:2	KB 3 C
RJMFB:2	KC 3 C
RJMFB:2	KF 3 C
RJMFB:2	KG 3 C
RJMFB:3	KB 3 C
RJMFB:3	KC 1 C
RJMFB:3	KF 3 C
RJMFB:3	KG 1 C
RJMFB:4	KB 3 C
RJMFB:4	KC 1 C
RJMFB:4	KF 3 C
RJMFB:4	KG 1 C
RJMFB:5	KB 3 C
RJMFB:5	KC 1 C
RJMFB:5	KF 3 C
RJMFB:5	KG 1 C

INLINE	PAGE
RJMFB:6	KB 3 C
RJMFB:6	KC 1 C
RJMFB:6	KF 3 C
RJMFB:6	KG 1 C
RJMFB:7	KB 2 C
RJMFB:7	KC 1 C
RJMFB:7	KF 2 C
RJMFB:7	KG 1 C
RJMFB:8	KB 2 C
RJMFB:8	KC 2 C
RJMFB:8	KF 2 C
RJMFB:8	KG 2 C
RRA07A:3	BC 3 C
RRA07A:4	BC 3 B
RRA07A:6	BC 3 B
RRA07A:7	BC 3 B
RRA07A:8	BC 3 B
RRA07B:1	BC 3 B
RRA07B:2	BC 3 B
RRA07B:3	BC 3 B
RRA07B:4	BC 3 C
RRA07B:5	BC 3 C
RRA07B:6	BC 3 C
RRA07B:7	BC 3 C
RRA07B:8	BC 3 C
RSCB:A	IG 2 C
RSCB:A	IG 3 C
RSCB:B	IG 2 D
RSCB:B	IG 3 D
RSOOF:A	GC 2 C
RSOOF:B	GC 1 C
RSOOF:C	GC 2 C
RSOOF:D	GC 1 C
RSOOF:E	GC 1 C
RWBOC:A	GH 3 B
RWBOC:A	GH 3 B
RWBOC:A	GH 2 B
RWBOC:A	GH 2 B
RWBOC:A	GH 2 B
RWBOC:B	GH 3 D
RWBOC:B	GH 2 D
RWBOC:B	GH 3 D
RWBOC:B	GH 2 C
RWBOC:B	GH 2 C
RWJBOC:A	GG 1 B
RWJBOC:B	GG 1 D
RWJRW:A	KB 1 D
RWJRW:A	KF 1 D
RWJRW:B	KB 1 D
RWJRW:B	KF 1 D

INLINE	PAGE
RWJRW:C	KB 1 D
RWJRW:C	KF 1 D
RWJRW:D	KB 1 D
RWJRW:D	KF 1 D
SCR_EXT:1	CD 0 A
SCR_EXT:2	CD 0 A
SCR_EXT:4	CD 0 A
SCR_EXT:5	CD 0 A
SCR_EXT:6	CD 0 B
SCR_EXT:7	CD 0 B
SCR_EXT:8	CD 0 B
SCR_EXT:9	CD 0 B
SCR_EXT:10	CD 0 B
SCR_EXT:11	CD 0 B
SCR_EXT:12	CD 0 B
SLBOC:A	GH 0 B
SLBOC:A	GH 1 B
SLBOC:A	GH 1 B
SLBOC:B	GH 1 D
SLBOC:B	GH 1 C
SLBOC:B	GH 0 C
SLCC:1	HJ 0 B
SLCC:3	HJ 0 B
SLCC:4	HJ 0 B
SLCC:5	HJ 0 B
SLCC:6	HJ 0 B
SLCC:7	HJ 0 B
SLCD:1	HJ 0 D
SLCD:2	HJ 0 D
SLCD:3	HJ 0 D
SLCL:A	HE 3 D
SLCL:B	HE 4 D
SLCO1:A	HJ 1 B
SLCO1:B	HJ 2 D
SLCO1:C	HJ 2 C
SLCO2:1	HJ 1 C
SLCO:1	HJ 1 D
SLMS:A	CM 2 D
SLMS:B	CM 2 D
SLMS:C	CM 2 D
SLMS:D	CM 1 D
SLOB:A	HD 4 C
SLOB:B	HD 3 C
SLOB:C	HD 1 B
SLOB:D	HD 2 B
SLOB:E	HD 1 B
SLOB:F	HD 2 D
SLOB:G	KB 1 B
SLOB:G	KF 1 B
SLOB:H	KB 1 B

INLINES

INLINE	PAGE
SLOB:H	KF 1 B
SLOB:J	KB 0 B
SLOB:J	KF 0 B
SLOB:K	KB 0 B
SLOB:K	KF 0 B
SLRH:A	KC 4 D
SLRH:A	KG 4 D
SLRH:B	KC 4 D
SLRH:B	KG 4 D
SLRH:C	KC 4 D
SLRH:C	KG 4 D
SLRH:D	KC 4 D
SLRH:D	KG 4 D
SLRW:A	HE 4 B
SLRW:A	HH 4 B
SLRW:B	GH 2 B
SLRW:C	GH 2 D
SLSK:A	HE 0 B
SLSK:A	HH 0 B
SLSK:B	HE 1 E
SLSK:B	HH 1 E
SLSO3:A	HD 0 D
SLSO3:C	HD 0 D

INLINE	PAGE
SLVA:A	HE 3 B
SLVA:B	HE 3 B
SLVA:C	HE 3 C
SPJTL1:A	FC 3 D
SPJTL1:B	FD 1 C
SPJTL1:C	FC 3 C
SPJTL1:E	FD 3 C
SPJTL1:G	FF 2 C
SPJTL1:H	FC 3 C
SPJTL1:K	GQ 2 C
SPJTL1:L	FD 1 D
SPJTL1:M	FF 2 D
SPJTL1:N	GQ 2 C
SPJTL1:R	FC 2 D
SPJTL1:S	FD 3 D
SPJTL:A	FC 2 D
SPJTL:B	FD 2 C
SPJTL:C	FC 1 C
SPJTL:E	FD 3 C
SPJTL:F	CH 3 C
SPJTL:G	FB 1 D
SPJTL:H	FC 2 C
SPJTL:J	FB 0 D

INLINE	PAGE
SPJTL:K	GQ 3 C
SPJTL:L	FD 2 D
SPJTL:M	FB 2 D
SPJTL:N	GQ 3 C
SPJTL:P	FB 2 D
SPJTL:R	CH 3 D
SPJTL:R	FB 1 D
SPJTL:R	FC 1 D
SPJTL:S	FD 3 D
TCEXT.A1:1	MB 1 B
TCEXT.A1:1	MB 1 C
TCEXT.A1:1	MC 1 A
TCEXT.A1:2	MB 1 B
TCEXT.A1:2	MB 1 C
TCEXT.A1:2	MC 1 A
TCEXT.A1:3	MB 1 B
TCEXT.A1:3	MB 1 C
TCEXT.A1:3	MC 0 A
TCEXT.A2:A	MB 2 B
TCEXT.A2:A	MB 2 C
TCEXT.A2:A	MC 1 A
TCEXT.A2:B	MB 1 B
TCEXT.A2:B	MB 1 C

INLINE	PAGE
TCEXT.A2:B	MC 1 A
TCEXT.A2:C	MB 1 B
TCEXT.A2:C	MB 1 C
TCEXT.A2:C	MC 1 A
TCEXT.A3:A	MB 1 B
TCEXT.A3:A	MB 1 C
TCEXT.A3:A	MC 0 A
TCEXT2.A1:1	MC 2 B
TCEXT2.A1:2	MC 2 C
TCEXT2.A1:3	MC 2 B
TCEXT2.A2:A	MC 2 C
TCEXT2.A2:B	MC 2 C
TCEXT2.A2:C	MC 2 C
TCEXT2.A3:A	MC 2 B
TCEXT3.A1:1	MC 2 E
TCEXT3.A1:2	MC 2 D
TCEXT3.A1:3	MC 2 E
TCEXT3.A2:A	MC 2 D
TCEXT3.A2:B	MC 2 D
TCEXT3.A2:C	MC 2 D
TCEXT3.A3:A	MC 2 E
TETL:A	GK 1 D
TETL:B	GF 0 B

INLINE	PAGE
TETL:C	GF 0 B
TETL:D	GF 0 B
TETL:E	GF 1 B
TGWQC:A	BJ 0 B
TGWQC:C	BJ 0 B
THSW:A	AF 4 E
THSW:B	AF 4 E
TRCU1:B	MC 3 A
TRCU1:C	MC 3 A
TRCU2:A	MC 3 A
TRCU2:B	MC 3 A
TRCU2:C	MC 3 A
TREA:1	CK 4 A
TREA:2	CK 4 B
VLBB1:A	BJ 0 E
VLBB1:A	BJ 3 E
VLBB1:B	BJ 1 E
VLBB1:B	BJ 3 E
VLBB1:C	BJ 1 E
VLBB1:C	BJ 3 E
VLBB1:D	BJ 1 E
VLBB1:D	BJ 3 E
VLBB1:E	BJ 1 E

INLINE	PAGE
VLBB1:E	BJ 3 E
VLBB1:F	BJ 1 E
VLBB1:F	BJ 3 E
VLBB1:G	BJ 1 E
VLBB1:G	BJ 3 E
VLQC:A	BE 3 B
VLQC:C	BE 2 B
Z02A:A	MB 5 B
Z02A:A	MC 4 C
Z02A:B	MB 5 B
Z02A:B	MC 4 B
Z02A:C	MB 5 B
Z02A:C	MC 4 B
Z02B:A	MB 5 B
Z02B:A	MC 4 B
Z02B:B	MB 5 B
Z02B:B	MC 4 B
Z02B:C	MB 5 B
Z02B:C	MC 4 B
Z02C:A	MB 4 B
Z02C:A	MC 4 C

SPLICES

SPLICE	PAGE
SP35A1 (S)	DB 3 C
SP1587HN5 (S)	BG 4 C
SP1587LN5 (S)	BG 4 C
SP1939HN5 (S)	BG 4 B
SP1939LN5 (S)	BG 4 B
SPAD1A1 (T)	ED 2 C
SPAD4A1 (T)	ED 2 B
SPAD7A1 (S)	ED 1 C
SPAD8A1 (S)	ED 1 C
SPAD10A1 (S)	ED 1 C
SPAD11A1 (S)	ED 1 C
SPAUX (S)	MC 3 C
SPAUXBL (S)	MC 1 C
SPB22A ( )	BA 4 A
SPB22B ( )	BA 4 B
SPC03C1 (T)	IC 2 D
SPC15JA3 (S)	AF 0 B
SPCA1A1 (T)	AH 1 C
SPCA2A1 (T)	AH 1 C
SPCA3A2 (T)	AH 1 B
SPCB5A1 (T)	AH 2 C
SPCB10A1 (S)	AI 4 B
SPCB11A1 (S)	AH 3 C
SPCB11A2 (S)	AH 3 C
SPCB11B5 ( )	FF 2 E
SPCB19A (BUTT SPLICE)	AI 3 E
SPCB19A1 (T)	AI 3 B
SPCB22B1 (S)	AI 4 B
SPCBV03A (S)	IA 3 C
SPCBV04A (S)	CM 0 D
SPCBV04B (S)	CM 0 C
SPCBVO3B (S)	IA 4 C
SPCLRSB (S)	MC 1 B
SPDL1H (S)	XD 1 C
SPDL1H1 (S)	XD 2 C
SPDL1H2 (S)	XD 3 C
SPDL1H3 (S)	XE 2 B
SPDL1H4 (S)	XE 3 B
SPDL1H12 (S)	JG 1 C
SPDL1HB1 (S)	XB 1 C
SPDL1HB2 (S)	XB 1 C
SPDL1HB3 (S)	XB 2 C
SPDL1HB4 (S)	XB 3 C
SPDL1HB5 (S)	XA 3 D
SPDL1HB5 (S)	XF 2 C
SPDL1HB8 (S)	CC 0 C
SPDL1HB8 (S)	CN 0 C
SPDL1HB10 (S)	EB 0 A
SPDL1HB10 (S)	EH 0 A
SPDL1HB11 (S)	BC 2 D

SPLICE	PAGE
SPDL1HB12 (S)	XB 2 B
SPDL1HB14 (S)	XB 2 B
SPDL1HB21 (S)	XB 2 C
SPDL1HN4 (S)	XF 2 B
SPDL1HN6 (S)	XB 2 B
SPDL1HN11 (S)	BI 2 B
SPDL1HN11 (S)	BM 2 A
SPDL1L (S)	XD 1 C
SPDL1L1 (S)	XD 2 C
SPDL1L2 (S)	XD 3 C
SPDL1L3 (S)	XE 2 B
SPDL1L4 (S)	XE 3 B
SPDL1L12 (S)	JG 1 C
SPDL1LB1 (S)	XB 1 C
SPDL1LB2 (S)	XB 1 C
SPDL1LB3 (S)	XB 2 C
SPDL1LB4 (S)	XB 3 C
SPDL1LB5 (S)	XA 3 D
SPDL1LB5 (S)	XF 2 C
SPDL1LB8 (S)	CC 0 C
SPDL1LB8 (S)	CN 0 C
SPDL1LB10 (S)	EB 0 A
SPDL1LB10 (S)	EH 0 A
SPDL1LB11 (S)	BC 2 D
SPDL1LB12 (S)	XB 2 D
SPDL1LB14 (S)	XB 2 D
SPDL1LB21 (S)	XB 2 C
SPDL1LN4 (S)	XF 3 B
SPDL1LN6 (S)	XB 2 D
SPDL1LN11 (S)	BI 2 B
SPDL1LN11 (S)	BM 2 A
SPDL2H1 (S)	XA 0 D
SPDL2H4 (S)	XA 2 D
SPDL2H4 (S)	XF 3 C
SPDL2H6 (S)	XA 1 E
SPDL2H8 (S)	DF 1 D
SPDL2H9 (S)	DF 1 D
SPDL2H12 (S)	BJ 1 C
SPDL2H13 (S)	BJ 1 C
SPDL2L1 (S)	XA 0 D
SPDL2L4 (S)	XA 2 D
SPDL2L4 (S)	XF 3 C
SPDL2L6 (S)	XA 1 D
SPDL2L8 (S)	DF 1 D
SPDL2L9 (S)	DF 1 E
SPDL2L12 (S)	BJ 1 C
SPDL2L13 (S)	BJ 1 B
SPDL3HN17 (S)	XC 1 C
SPDL3HN17A (S)	KH 3 B
SPDL3LB16 (S)	HB 4 B

SPLICE	PAGE
SPDL3LB16 (S)	HD 4 B
SPDL3LB16 (S)	HE 4 B
SPDL3LB16 (S)	HH 4 B
SPDL3LB16 (S)	XC 1 B
SPDL3LB17 (S)	XC 3 C
SPDL3LN17 (S)	XC 1 C
SPDL4HB4 (S)	BI 3 B
SPDL4HB4 (S)	BM 3 B
SPDL4HN1 (S)	XA 3 B
SPDL4HN4_1 (S)	BJ 1 A
SPDL4HN4_3 (S)	BJ 4 C
SPDL4HN4_4 (S)	BD 2 C
SPDL4HN4_5 (S)	BE 3 D
SPDL4HN4_6 (S)	BG 1 C
SPDL4HN4_7 (S)	EB 2 C
SPDL4HN4_7 (S)	EH 2 C
SPDL4HN4_8 (S)	BE 1 D
SPDL4LB4 (S)	BI 3 B
SPDL4LB4 (S)	BM 3 B
SPDL4LN1 (S)	XA 3 B
SPDL4LN4_1 (S)	BJ 1 B
SPDL4LN4_3 (S)	BJ 4 C
SPDL4LN4_4 (S)	BD 2 C
SPDL4LN4_5 (S)	BE 2 D
SPDL4LN4_6 (S)	BG 1 C
SPDL4LN4_7 (S)	EB 3 C
SPDL4LN4_7 (S)	EH 3 C
SPDL4LN4_8 (S)	BE 0 D
SPDL7H1 (S)	CK 1 B
SPDL7H2 (S)	CD 3 C
SPDL7H3 (S)	CD 3 B
SPDL7H3 (S)	CP 3 B
SPDL7L1 (S)	CK 1 B
SPDL7L2 (S)	CD 3 C
SPDL7L3 (S)	CD 2 B
SPDL7L3 (S)	CP 3 B
SPDL10HB1 (S)	XF 1 B
SPDL10HB3 (S)	XF 2 C
SPDL10LB1 (S)	XF 1 B
SPDL10LB3 (S)	XF 2 C
SPDLA186AEA1 (S)	HJ 1 C
SPDLA186AFA1 (S)	HJ 1 C
SPDLB11A (S)	JH 2 E
SPDLB11A2 (S)	JH 3 E
SPDLHB11A (S)	JH 2 D
SPDLHB11A2 (S)	JH 2 D
SPEC3 (S)	CD 1 C
SPEC3 (S)	CP 1 C
SPEC8 (S)	CC 1 D
SPEC8 (S)	CN 1 D

SPLICE	PAGE
SPEC32 (S)	CC 1 D
SPEC32 (S)	CN 1 D
SPEC38 (S)	CD 1 C
SPEC38 (S)	CP 1 C
SPEC39 (S)	CD 2 C
SPEC39 (S)	CP 2 C
SPEC40 (S)	CD 1 C
SPEC40 (S)	CP 1 C
SPEC54A (S)	CC 2 D
SPEC57 (S)	CC 0 D
SPEC57 (S)	CN 0 D
SPEC62 (S)	CC 3 D
SPEC62 (S)	CN 3 D
SPEC84A (S)	CD 1 D
SPEC84A (S)	CP 1 D
SPEC84A2 (S)	CD 1 D
SPEC84A2 (S)	CP 1 D
SPECHA1 (S)	CL 1 D
SPEMA32A1 (S)	CK 3 D
SPEMA44A2 (S)	CK 2 D
SPEMA49A (S)	CK 2 C
SPEMA54A1 (S)	CK 1 D
SPEMA59A1 (S)	CK 3 D
SPF02A1 (T)	KC 0 B
SPF02A1 (T)	KG 0 B
SPF02A2 ( )	KC 0 C
SPF02A2 ( )	KG 0 C
SPF03A1 ( )	IC 1 B
SPF08A4 (T)	CM 2 C
SPF12A1 (T)	XF 2 C
SPF13A (S)	BJ 0 C
SPF14B1 (T)	EB 3 C
SPF14B1 (T)	EH 3 C
SPF14C1 ( )	GJ 1 C
SPF15C1 (T)	AB 1 C
SPF15D1 (S)	AB 0 B
SPF15D2 (S)	BJ 0 C
SPF15D5 (T)	XF 3 D
SPF15D10 (T)	BA 0 C
SPF15E1 (S)	AB 0 B
SPF15MA1 (S)	DB 2 A
SPF15P1 (T)	AI 0 B
SPF19A1 (T)	DA 1 A
SPF20A1 (T)	BA 0 B
SPF20A1 (T)	KA 1 B
SPF20A1 (T)	KB 2 A
SPF20A1 (T)	KC 1 A
SPF20A1 (T)	KE 1 B
SPF20A1 (T)	KF 2 A
SPF20A1 (T)	KG 1 A

SPLICES

SPLICE	PAGE
SPF25A1 (T)	IB 2 C
SPF26A1 (T)	GP 0 C
SPF26E1 (T)	GP 1 C
SPF30B1 ( )	GI 2 C
SPF31B1 ( )	FF 2 C
SPF31C1 ( )	IB 3 B
SPF34A1 (T)	DP 2 B
SPF34C1 (S)	DP 1 C
SPF34C2 ( )	DP 3 B
SPF34E1 (S)	DP 2 C
SPF35A1 (T)	DF 1 C
SPF42A1 (NS)	IG 3 B
SPF50A1 (NS)	HE 0 C
SPF50A1 (NS)	HH 0 C
SPF51A1 (T)	HA 0 B
SPF52A3 ( )	BG 0 B
SPF55B2 ( )	GC 0 C
SPF56A1 (T)	CM 0 B
SPF56A3 (T)	CM 1 E
SPF58A1 (T)	GA 1 B
SPF60A1 (NS)	HB 3 B
SPF62C1 (S)	GK 1 D
SPF62F1 (S)	BH 1 B
SPF63A1 (T)	FC 1 B
SPF63G1 ( )	FB 1 B
SPF67A1 (T)	EB 3 B
SPF67A1 (T)	EH 3 B
SPF67A1 (T)	JE 0 B
SPF67A2 (S)	JE 0 C
SPF68A1 (T)	DA 1 C
SPF69A1 (S)	DA 2 B
SPF69A2 (S)	DA 3 D
SPF77A1 (T)	IG 0 C
SPF78A1 (T)	IA 2 B
SPF78A4 ( )	IA 0 D
SPF78B1 (T)	IA 0 C
SPF78D1 (T)	IA 3 C
SPF78V01A (S)	IA 2 D
SPF78V01B (S)	IA 2 D
SPF79A1 (T)	IG 2 B
SPF80A1 (NS)	IG 4 B
SPF81A2 ( )	NA 1 B
SPF81A8 ( )	NA 3 B
SPF81D1 (S)	IH 1 B
SPF81D2 (S)	IH 1 B
SPF81D3 (S)	IH 3 B
SPFB01C1 (NS)	HD 3 D
SPFB01C2 (NS)	HE 2 B
SPFB02A1 (NS)	HD 2 B
SPFB07A1 (NS)	HD 2 C

SPLICE	PAGE
SPFB07B1 (NS)	HD 3 B
SPFB07B1_1 (NS)	HH 3 B
SPFB08A1 (S)	CM 3 C
SPFE4A (S)	CD 3 B
SPFE4A1 (S)	AG 2 C
SPFE5A4 (S)	BP 2 D
SPFE6A1 (T)	AG 0 C
SPFE7A1 (T)	BM 1 B
SPFE9A (S)	CB 2 B
SPFE11A1 (T)	EA 2 B
SPFE11A1 (T)	EC 2 B
SPFE11A1 (T)	EG 2 B
SPFE12A1 (S)	CE 2 C
SPFE13A1 ( )	FA 1 B
SPFE13A2 ( )	FA 1 B
SPFE13A3 ( )	FA 1 C
SPFE13A6 ( )	FA 3 C
SPFE14A1 (S)	FG 0 C
SPFE14A2 (S)	FG 2 C
SPFE15R1 (S)	BP 2 C
SPFE17B (S)	CP 3 C
SPFE18A (S)	CC 1 B
SPFE18A1 (S)	CC 3 D
SPFE18A1 (S)	CN 3 D
SPFE18B (S)	CN 1 C
SPFE18B1 (S)	CL 3 B
SPFE19A (S)	DF 0 C
SPFE22A1 (S)	CL 3 B
SPFFB06A1 (NS)	HJ 1 C
SPFM01A1 (S)	AB 3 A
SPFM01C1 (S)	AB 3 B
SPFM01C2 (S)	AB 3 B
SPFM01C6 (S)	AA 1 B
SPFM01E1 (S)	AA 2 D
SPFM01F1 (S)	AA 2 C
SPFM01H1 (S)	AB 2 D
SPFT0A2 (S)	DB 1 D
SPFT01A1 (S)	CK 0 C
SPFT02A1 (S)	DB 1 C
SPFT02A3 (S)	DB 1 D
SPFT02A4 (S)	DB 0 D
SPFT02AA1 (S)	DB 1 D
SPFT02AA2 (S)	DB 1 C
SPFT3A1 ( )	AM 2 C
SPG01A4 (S)	AM 3 D
SPGB12A1 (NS)	HB 2 C
SPGND (S)	MC 3 C
SPGNDW (S)	MC 0 B
SPHA12A1 (S)	BA 2 E
SPHA12A9 (S)	BA 3 E

SPLICE	PAGE
SPHA12A15 (S)	BB 3 C
SPHC11A1 (S)	BB 1 C
SPHC11A2 (S)	BB 3 C
SPLB1A1 (T)	KC 2 C
SPLB1A1 (T)	KG 2 C
SPLB2A1 (T)	KC 3 C
SPLB2A1 (T)	KG 3 C
SPLB3A1 (T)	KB 2 D
SPLB3A1 (T)	KF 2 D
SPLB3BB1 (T)	JH 4 D
SPLB4A1 (T)	KB 3 D
SPLB4A1 (T)	KF 3 D
SPLB5A1 (T)	KB 4 D
SPLB5A1 (T)	KF 4 D
SPLB6A1 (T)	KB 4 D
SPLB6A1 (T)	KF 4 D
SPLB7A1 (T)	KC 2 C
SPLB7A1 (T)	KG 2 C
SPLB8A1 (T)	KC 2 C
SPLB8A1 (T)	KG 2 C
SPLC1A1 (CRIMP SPLICE)	BE 3 D
SPLTY (S)	MC 1 C
SPM2A1 (T)	BM 1 D
SPMA18A1 (T)	BI 0 D
SPMA18A1 (T)	BM 0 D
SPMB5A1 (T)	BI 0 B
SPMB5A1 (T)	BM 0 B
SPMRKBN (S)	MC 1 C
SPN58A2 (S)	DE 2 D
SPN103A1 (T)	DF 2 D
SPN112A1 (S)	DE 3 C
SPN117A1 (T)	DF 3 D
SPN131A1 (S)	DE 1 D
SPN158A1 (T)	DE 2 C
SPNA16 (S)	DA 3 A
SPNA19A1 (S)	DA 4 D
SPPA4B1 (S)	MA 4 B
SPPA7A1 ( )	GE 2 C
SPPA7A2 ( )	GE 3 C
SPPA10A1 (S)	GA 2 D
SPPA10A2 ( )	GD 3 B
SPPA10A3 (S)	GF 1 C
SPPA10A5 ( )	GF 3 D
SPPA13A1 ( )	GF 3 D
SPPA17A1 ( )	GC 2 C
SPPA17A7 ( )	GC 3 C
SPPC11A1 (T)	GP 0 D
SPPD1A1 ( )	GE 1 C
SPPD1A2 ( )	GE 2 C
SPPD4A1 (T)	GA 2 D

SPLICE	PAGE
SPPD4A3 (S)	GD 1 B
SPPD4A6 (S)	GD 3 C
SPPD4A7 (S)	GD 1 C
SPPD4A9 ( )	BC 3 D
SPPD7A1 ( )	GG 3 C
SPPD7A1 ( )	GH 3 B
SPPD8A1 (T)	GB 1 B
SPPD8AJ2 (T)	EH 4 B
SPPD8C1 ( )	DP 3 B
SPPD16B1 (S)	MA 3 B
SPPD17A1 ( )	IE 2 B
SPPD18A1 ( )	GI 1 C
SPRA7A1 (T)	EB 1 D
SPRA7A1 (T)	EH 1 E
SPRA30A1 (T)	EB 1 C
SPRA30A1 (T)	EH 1 D
SPRTGN (S)	MC 1 C
SPSTOPRD (S)	MC 0 B
SPUGG06F (S)	HJ 2 B
SPX01 (S)	AF 0 C
SPX01_A (S)	AN 3 C
SPX01_B (S)	AL 1 C
SPX01A1 (S)	AC 0 D
SPX01A1 (S)	AE 2 E
SPX01A1 (S)	CD 4 B
SPX01A1 (S)	CK 4 D
SPX01A1 (S)	CP 3 C
SPX01A1 (S)	DA 4 B
SPX01A1 (S)	DB 4 D
SPX01A1 (S)	DF 0 B
SPX01A1 (S)	FG 0 E
SPX01A1 (S)	JF 3 B
SPX01A2 (S)	CK 4 D
SPX01A3 (S)	AG 1 D
SPX01A3 (S)	CB 1 D
SPX01A12 (S)	BP 2 D
SPX01A20 (S)	AE 2 D
SPX01A20 (S)	FC 3 E
SPX01A20 (S)	FD 1 E
SPX01B1 (S)	AE 2 C
SPX01B1_A (S)	AN 3 C
SPX01B_2 (S)	AN 1 C
SPX01BA1 (S)	AE 3 C
SPX01BA1 (S)	AN 1 C
SPX01D1 (S)	AE 1 C
SPX01D1 (S)	AN 0 C
SPX01D1_B (S)	AL 1 C
SPX01DA1 (S)	AE 2 D
SPX01DA1 (S)	CE 2 D
SPX01DA1 (S)	EB 0 E

SPLICES

SPLICE	PAGE
SPX01DA1 (S)	EC 3 E
SPX01DA1 (S)	EG 3 E
SPX01DA1 (S)	EH 0 E
SPX01DA1 (S)	FA 0 E
SPX01DA1 (S)	GD 1 D
SPX01DA1 (S)	GE 3 D
SPX01DA1 (S)	GF 1 B
SPX01DA1 (S)	GP 3 D
SPX01DA1 (S)	HJ 2 E
SPX01DA1 (S)	JE 1 D
SPX01DA4 (S)	AE 2 D
SPX01DA4 (S)	CH 2 D
SPX01DA4 (S)	FB 2 E
SPX01DA4 (S)	FC 1 E
SPX01DA4 (S)	FD 2 E
SPX01DA5 (S)	GF 1 D
SPX01DA5A1 (S)	GF 1 B
SPX01DA7 ( )	GF 3 E
SPX01DA12 ( )	FA 3 D
SPX01DA14 ( )	FA 1 C
SPX01DA21 (S)	GP 3 C
SPX01DA25 (S)	GD 3 D
SPX01DA26 (S)	GD 1 D
SPX01DA27 (S)	GD 0 D
SPX01DA31 ( )	GE 2 C
SPX01DA32 ( )	GE 3 C
SPX01FA1 (S)	DB 0 C
SPX01FA2 (S)	DB 0 C
SPX01FA3 (S)	DB 0 D
SPX02CA1 (S)	HA 1 D
SPX02CA3 (S)	CC 4 D
SPX02CA3 (S)	CN 4 D
SPX02CA4 ( )	DP 2 D
SPX03BA1 (S)	DF 0 C
SPX03CA1 (S)	AE 3 D
SPX03CA1 (S)	GP 2 E
SPX03CA1 (S)	GQ 1 E

SPLICE	PAGE
SPX03D100 ( )	GC 0 D
SPX03DA1 (S)	AE 3 C
SPX03DA3 (S)	AE 3 C
SPX03DA3 (S)	AH 4 E
SPX03DA3 (S)	BA 0 E
SPX03DA3 (S)	GA 0 D
SPX03DA3 (S)	GB 3 E
SPX03DA3 (S)	GG 1 E
SPX03DA3 (S)	JD 3 E
SPX03DA3 (S)	XA 2 E
SPX03DA11 (T)	XA 2 E
SPX03DA11 (T)	XF 3 D
SPX03DA14 ( )	AE 4 E
SPX03DA14 ( )	IA 1 E
SPX03DA14 ( )	IC 2 E
SPX03DA14 ( )	IF 1 E
SPX03DA111 (CRIMP SPLICE)	BE 3 C
SPX03EA1 (S)	AE 3 D
SPX03EA1 (S)	AJ 0 D
SPX03EA1 (S)	BH 0 D
SPX03EA1 (S)	BI 0 E
SPX03EA1 (S)	BM 0 E
SPX03EA1 (S)	IG 3 E
SPX03EA1 (S)	NA 0 E
SPX03EA5 (S)	EA 4 C
SPX03EA5 (S)	EC 4 C
SPX03EA5 (S)	EG 4 B
SPX03EA19 (T)	BI 1 B
SPX03EA19 (T)	BM 1 B
SPX03FA1 (S)	AE 3 B
SPX03FA1 (S)	AH 0 E
SPX03FA1 (S)	GA 1 E
SPX03FA1 (S)	GG 1 E
SPX03FA1 (S)	GH 0 E
SPX03FA1 (S)	HA 1 E
SPX03FA1 (S)	IE 2 E
SPX03FA3 ( )	IA 3 D

SPLICE	PAGE
SPX03FA03 ( )	IB 3 D
SPX03FA3_1 ( )	IA 3 B
SPX03FA7 (T)	EB 4 C
SPX03FA7 (T)	EH 4 C
SPX03FA9 ()	GI 1 D
SPX03FA9 ()	GJ 2 E
SPX03FA12 ( )	NA 2 C
SPX03FA20 (S)	HA 1 C
SPX03FA22 (S)	AE 4 D
SPX03FA22 (S)	HB 0 E
SPX03FA22 (S)	HD 0 E
SPX03FA22 (S)	HE 2 E
SPX03FA22 (S)	HH 2 E
SPX03FA23 (T)	JG 2 C
SPX03FA24 (S)	AE 3 A
SPX03FA24 (S)	GA 2 E
SPX03FA24 (S)	IE 2 E
SPX03FA24 (S)	IG 0 E
SPX03FA25 ( )	IA 3 E
SPX03FA26 (T)	JH 0 C
SPX03FA27 ( )	AE 3 B
SPX03FA27 ( )	GC 2 D
SPX03FA27 ( )	IA 0 E
SPX03FA27 ( )	IG 2 D
SPX03FA27 ( )	KC 3 E
SPX03FA27 ( )	KG 3 E
SPX03FA28 ( )	AE 2 A
SPX03FA28 ( )	IA 3 E
SPX03FA28 ( )	IC 3 E
SPX03FA28 ( )	IF 2 E
SPX03FA33 ( )	GJ 1 D
SPX03FA37 ( )	GG 3 D
SPX03FA37 ( )	GH 3 C
SPX03FA39 (NS)	GH 0 D
SPX03FA39_1 (NS)	GH 2 D
SPX03FA43 ( )	IE 2 D
SPX03FA52 (NS)	HB 2 D

SPLICE	PAGE
SPX03FA55 (NS)	HD 1 D
SPX03FA55 (NS)	HE 1 C
SPX03FA55 (NS)	HH 1 D
SPX03FA56 (NS)	HD 2 D
SPX03FA60 (NS)	HE 2 C
SPX03FA61 (NS)	HH 2 C
SPX03FA62 ( )	HE 3 C
SPX03FA73 (NS)	HD 3 D
SPX03FA87 (S)	DF 3 A
SPX03FA88 ( )	GC 3 D
SPX03FA90 ( )	NA 1 C
SPX03FA106 (NS)	HE 1 D
SPX03FA106 (NS)	HH 1 D
SPX03FD1 ( )	DP 3 C
SPX03FG1 ( )	IA 4 D
SPX03FH1 (NS)	HD 2 D
SPX03G (T)	DA 2 D
SPX03GA1 (S)	DA 4 B
SPX03GA4 (S)	DA 1 C
SPX04BA1 (S)	EB 2 A
SPX04BA1 (S)	EH 1 A
SPX04CA1 (S)	GI 2 D
SPX04EA1 (S)	IH 1 D
SPX04EA2 (S)	IH 1 C
SPX04EA3 (S)	IH 3 C
SPX4FA1 (S)	DB 0 C
SPX06BA1 (S)	KA 3 D
SPX06BA1 (S)	KE 3 D
SPX06DA1 ( )	BG 0 D
SPX06HA (S)	BJ 0 C
SPX16AB (T)	CM 1 C
SPXA170 (NS)	HJ 0 D
SPXB300BA (S)	CM 2 E
SPXC1F6 (S)	BB 4 C
SPXC1G4A1 (S)	CL 3 B
SPXD10D (S)	AL 2 C
SPXH16AB2 (NS)	CM 2 D

SHELLS

REF	PAGE
	AB 3 E
	DA 1 A
	DB 3 A
	DF 1 A
A03A	BA 0 D
A03B	BA 2 C
A03C	BB 0 C
A03S	BD 1 B
A04	HD 1 B
A04	HE 1 C
A04	HH 1 C
A04A	HE 1 D
A04A	HH 1 D
A07A	BC 4 B
A07A	KA 0 C
A07A	KB 2 C
A07A	KC 0 B
A07A	KD 1 B
A07A	XC 4 D
A12A	EA 0 C
A12B	EC 0 C
A12B	ED 0 A
A12B	EG 0 C
A13B	DA 3 D
A13E	DA 2 B
A14C	CC 0 D
A14C	CD 0 E
A14D	CN 0 D
A14D	CP 0 E
A15	JA 1 C
A16	EB 0 C
A16	EH 0 C
A17	AG 1 C
A17	AH 0 D
A17	AI 0 A
A17	AJ 1 C
A19E	DF 0 E
A27	GA 4 C
A27	GB 1 C
A27	GG 0 A
A27	GK 0 A
A27	IE 2 A
A34	HA 2 B
A36	BI 0 C
A36	BM 0 C
A38	BE 0 C
A38A	BG 0 C
A46	HB 4 B
A46	HD 3 A
A46	HE 3 A

REF	PAGE
A46	HH 3 A
A46	XC 2 B
A48	KC 0 C
A48	KG 0 C
A51	JF 2 C
A55A	DB 1 D
A56	KC 0 C
A56	KG 0 C
A57A	DE 0 A
A57A	DF 0 C
A58A	DE 0 D
A60	JG 1 B
A61A	HJ 4 D
A70A	DB 0 C
A72	AA 2 C
A72	HB 2 D
A80	FA 1 C
A102A	BJ 2 D
A102B	BJ 0 D
A109	DA 1 C
A131A	HJ 4 B
A132	FG 0 C
A132B	FG 2 C
A137	CK 0 C
A138	CK 1 E
A138A	CC 1 C
A147	BP 2 D
A148	IB 3 C
A158	KD 3 C
A158	KE 1 C
A158	KF 2 C
A158	KG 1 B
A158	KH 1 C
A158A	XC 0 B
A170	HJ 0 B
A186	HJ 0 C
A225	AB 4 D
A232	JH 2 B
B06	AI 1 C
B06A	BA 3 D
B06AP	BA 2 D
B06B	BA 3 D
B07	BA 3 D
B09	BA 4 D
B13	EA 1 B
B13	EC 2 B
B13	EG 2 B
B14	EA 1 B
B14	EC 1 B
B14	EG 1 B

REF	PAGE
B15	EA 0 D
B15	EC 0 B
B15	EG 0 B
B16	EA 1 D
B16	EC 4 D
B16	EG 4 D
B17	EA 2 D
B17	EC 1 D
B17	EG 1 D
B18	EA 3 D
B18	EC 2 D
B18	EG 2 D
B22A	BA 3 A
B22A_S	BA 4 A
B22B	BA 3 A
B22C	CC 3 D
B22C	CN 3 D
B25	AI 1 D
B25A	AI 4 E
B30A	EB 2 E
B30A	EH 2 E
B38RC	BB 3 D
B38RF	BB 3 D
B38RR	BB 4 D
B39	BB 0 B
B49	ED 1 D
B50	ED 2 D
B55A	EB 0 D
B55A	EH 0 D
B55B	EH 1 D
B56	BA 3 B
B58A	EB 1 D
B58A	EH 1 D
B58R	BA 2 D
B59	HA 2 B
B60A	KA 2 E
B60A	KB 3 E
B60A	KC 1 E
B60A	KE 2 E
B60A	KF 3 E
B60A	KG 1 E
B60B	KA 2 E
B60B	KB 2 E
B60B	KC 2 E
B60B	KE 2 E
B60B	KF 2 E
B60B	KG 2 E
B60C	KA 1 E
B60C	KB 4 E
B60C	KC 0 E

REF	PAGE
B60C	KE 1 E
B60C	KF 4 E
B60C	KG 0 E
B60D	KA 1 E
B60D	KB 2 E
B60D	KC 0 E
B60D	KE 1 E
B60D	KF 2 E
B60D	KG 0 E
B60E	KB 0 D
B60E	KF 0 D
B60F	KB 0 D
B60F	KF 0 D
B60G	KC 2 D
B60G	KG 2 D
B60G_1	KG 2 E
B60H	KC 2 D
B60H	KG 2 D
B60H_1	KG 2 E
B60I	KC 2 D
B60I	KG 3 E
B60J	KB 1 E
B60J	KF 1 E
B60K	KB 1 E
B60K	KF 1 E
B60L_H2	KB 1 B
B60L_H2	KF 1 B
B60L_H4	KB 1 C
B60L_H4	KF 1 C
B60M_H2	KB 0 B
B60M_H2	KF 0 B
B60M_H4	KB 0 C
B60M_H4	KF 0 C
B60N	KC 4 D
B60N	KG 4 D
B60P	KC 4 D
B60P	KG 4 D
B60R	KC 4 B
B60R	KG 4 B
B60S	KC 4 B
B60S	KG 4 B
B61A	KA 2 E
B61A	KB 3 E
B61A	KC 0 E
B61A	KE 2 E
B61A	KF 3 E
B61A	KG 0 E
B61B	KA 1 E
B61B	KB 2 E
B61B	KC 1 E

REF	PAGE
B61B	KE 1 E
B61B	KF 2 E
B61B	KG 1 E
B62	KC 0 C
B62	KG 0 C
B63	KD 2 B
B64A	JH 4 D
B64B	JH 4 D
B68	AI 0 D
B68	CC 2 C
B68	CL 1 B
B68	CN 2 C
B68_B	AI 1 E
B78	JF 1 C
B80	CA 1 B
B82A	JE 0 D
B96	CK 3 B
B96B	CK 2 B
B105A	DE 3 D
B121	GP 3 B
B122A	CL 2 E
B122B	CL 2 B
B123	CB 2 D
B123A	CB 3 D
B123A	CL 2 E
B123B	CC 1 C
B123B	CN 1 C
B142B	CC 3 C
B142C	CD 3 B
B142C	CK 1 B
B142C	CP 3 A
B152	ED 2 C
B153	ED 3 C
B177	ED 3 B
B185A	CL 1 D
B300B	CM 3 D
B300C	CM 2 D
B310	CK 2 B
B319	CM 1 D
B319_B	CM 2 D
E05A	GG 1 C
E05A	GH 1 C
E05B	GG 2 C
E05B	GH 0 C
E05C	GG 2 C
E05C	GH 1 C
E05D	GG 3 C
E05D	GH 0 C
E05E	GG 3 C
E05E	GH 1 C

REF	PAGE
E05F	GG 3 C
E05F	GH 2 C
E05K	GG 2 C
E06	GK 1 E
E06LED	GK 1 E
E07L	GE 2 C
E07R	GE 3 C
E08L	GE 3 C
E08R	GE 3 C
E10	GF 3 B
E10LA	GF 0 C
E10RA	GF 1 C
E11L	GA 1 D
E11L	IE 2 C
E11R	GA 2 D
E11R	IE 2 C
E12A	GC 1 D
E12B	GC 1 D
E12C	GC 2 D
E12D	GC 2 D
E12E	GC 2 D
E13L	GD 1 C
E13R	GD 1 C
E14L	GJ 1 D
E14R	GJ 1 D
E16L	IA 1 D
E16R	IA 1 D
E17C	HE 3 D
E17C	HH 4 B
E17C_H2	HD 3 C
E17C_H4	HD 3 C
E17D	HE 4 C
E17L	IA 0 D
E17L2	IA 1 B
E17R	IA 0 D
E18A	HD 4 D
E18B	HD 4 C
E18C	HE 2 B
E18C	HH 2 C
E18D	HE 2 B
E18E	HE 2 C
E18F	HE 3 C
E18G	HD 2 C
E18H	HD 2 C
E18J	HD 3 D
E18K	HD 3 D
E18L	HH 3 B
E18M	HD 1 C
E18N	HH 2 B
E18P	HH 3 C

SHELLS

REF	PAGE
E18R	HH 3 B
E20A	IG 1 C
E22A	GC 0 D
E22B	GC 0 D
E22C	GC 0 D
E23A	HD 2 B
E23B	HD 2 B
E26L	GD 2 B
E26L_1	GD 3 D
E26R	GD 3 B
E26R_1	GD 3 D
E28	HB 4 D
E28A	HJ 0 C
E30L	GD 0 C
E30R	GD 2 C
E32	HB 3 D
E32A	HA 2 D
E36A	GC 3 D
E36B	GC 3 D
E36C	GC 3 D
E36D	GC 4 D
E36E	GC 4 D
E37	HE 1 B
E37	HH 1 B
E39	GF 2 C
E43L	GE 1 C
E43R	GE 2 C
E80L	BP 3 B
E81A	IH 1 C
E81B	IH 1 C
E81C	IH 1 C
E81D	IH 2 C
E81E	IH 2 C
E81F	IH 2 C
E81G	IH 3 C
E81H	IH 3 C
E81J	IH 3 C
EM01	CD 2 D
EM02	CD 3 C
EM03	CD 4 D
EM04	CD 4 A
F01	AB 2 D
F01	BJ 0 A
F01	IC 2 A
F02	AB 3 D
F02	BA 1 A
F02	KA 1 A
F02	KB 2 A
F02	KC 0 A
F02	KE 1 A

REF	PAGE
F02	KF 2 A
F02	KG 0 A
F03	AB 3 D
F03	IC 1 A
F04	AB 3 D
F04	IC 3 A
F05	AB 3 D
F08	AB 3 C
F08	GB 3 A
F09	AB 3 C
F09	GQ 1 A
F10	AB 3 C
F10	GB 3 B
F11	AB 3 C
F11	BD 2 A
F12	AB 4 C
F12	BC 1 A
F12	XA 4 A
F13	AB 4 C
F13	BJ 0 A
F14	AB 4 C
F14	EB 4 A
F14	EH 4 A
F14	GJ 1 A
F15	AB 1 B
F16	AB 1 B
F16	GB 3 A
F17	AB 2 B
F17	GB 3 A
F18	AB 2 B
F18	GB 3 B
F19	AB 2 B
F19	DA 0 A
F20	AB 2 B
F20	BA 0 A
F20	KA 1 A
F20	KB 3 A
F20	KC 1 A
F20	KE 1 A
F20	KF 3 A
F20	KG 1 A
F21	AB 0 E
F21	CC 2 A
F21	CL 1 A
F21	CN 2 A
F22	AB 0 E
F22	AC 2 A
F23	AB 0 E
F23	HA 0 B
F24	AB 1 E

REF	PAGE
F25	AB 1 E
F25	IB 2 A
F26	AB 1 E
F26	GP 0 A
F27	AB 1 E
F27	FD 2 A
F28	AB 1 E
F28	JA 1 A
F29	AB 2 E
F29	BH 1 A
F30	AB 2 E
F30	GI 2 A
F31	AB 2 E
F31	FF 1 A
F31	IB 3 A
F32	AB 3 E
F32	GI 1 A
F33	AB 3 E
F34	AB 3 E
F34	DP 2 A
F36	AA 3 D
F37	AA 3 D
F38	AA 4 D
F39	AA 4 D
F40	AA 4 D
F41	AA 4 D
F42	AA 0 D
F42	IG 3 A
F43	AA 0 D
F43	BH 0 A
F43	GC 2 A
F44	AA 0 D
F45	AA 0 D
F45	NA 3 A
F46	AA 1 D
F46	HB 2 A
F47	AA 1 D
F47	HB 3 A
F48	AA 1 D
F48	HB 3 A
F49	AA 0 B
F49	GB 3 B
F50	AA 0 B
F50	HB 2 A
F51	AA 0 B
F51	HA 0 A
F52	AA 0 B
F52	BE 2 A
F52	BG 0 A
F53	AA 1 B

REF	PAGE
F53	IF 2 A
F54	AA 1 B
F54	EA 2 A
F54	EC 2 A
F54	EG 2 A
F55	AA 1 B
F55	JH 0 A
F56	AA 2 E
F56	CM 0 A
F57	AA 3 E
F57	JG 2 A
F57	JH 0 A
F58	AA 3 E
F58	GA 1 A
F59	AA 3 E
F59	BE 2 A
F59	BG 0 A
F60	AA 3 E
F60	HB 3 A
F61	AA 4 E
F61	BC 1 A
F62	AA 4 E
F62	GK 3 A
F63	AA 3 D
F63	FC 1 A
F64	AA 3 D
F64	BH 1 A
F65	AA 3 D
F65	BH 0 A
F66	AA 3 D
F66	BD 2 A
F67	AA 4 D
F67	EB 3 A
F67	EH 3 A
F67	JE 0 A
F68	AA 4 D
F68	DA 1 B
F69	AA 4 D
F69	DA 0 B
F76	AA 0 D
F77	AA 0 D
F77	IG 0 A
F78	AA 1 D
F78	IA 2 A
F79	AA 1 D
F79	IG 2 A
F80	AA 1 D
F80	IG 4 A
F81	AA 1 D
F81	NA 1 A

REF	PAGE
F82	AA 2 D
F82	IG 2 A
F90	HE 0 C
F90	HH 0 C
FB03	BE 3 B
FB8	AM 4 C
FB08	CM 4 C
FB09	HI 1 B
FE1	AC 0 B
FE1	MA 1 A
FE2	AC 1 B
FE2	MA 1 A
FE3	AC 1 B
FE3	MA 2 A
FE4	AC 2 C
FE4	AG 2 A
FE5	AC 2 C
FE5	AG 3 A
FE5	BP 2 A
FE6	AC 2 C
FE6	AG 0 A
FE7	AC 2 C
FE7	AG 0 A
FE8	AC 3 C
FE8	AG 3 A
FE8	CL 3 A
FE9	AC 3 C
FE9	AG 4 A
FE9	CL 3 A
FE10	AC 3 C
FE10	MA 3 A
FE11	AC 3 C
FE11	EA 2 A
FE11	EC 2 A
FE11	EG 2 A
FE12	AC 3 C
FE12	CE 2 A
FE13	AC 4 C
FE13	FA 2 A
FE14	AC 4 C
FE14	FG 0 A
FE15	AC 4 C
FE16	AC 4 C
FE17	AD 0 B
FE17	CP 3 A
FE18	AD 0 B
FE18	CC 1 A
FE18	CL 3 A
FE18	CN 1 A
FE19	AD 1 B

REF	PAGE
FE19	DB 4 A
FE19	DF 0 A
FE20	AD 1 B
FE20	MA 3 B
FE21	AD 1 B
FE21	MA 3 B
FE22	AD 1 B
FE23	AD 2 B
FE24	AD 2 B
FE25	AD 0 B
FE25	CD 1 A
FE25	CP 1 A
FEM01	AB 3 A
FEM02	AN 2 C
FEM03A	ND 3 D
FEM03B	ND 3 D
FFB06A	HJ 2 B
FFB07A	HJ 3 B
FFB08A	HJ 3 B
FM08A	HJ 3 D
FM_A5	HJ 2 B
FT01	CK 0 B
FT02A	DB 0 D
FT03	AM 3 D
FT04	AM 2 D
FT05	CC 3 B
FT05	CN 3 B
G01	AB 4 B
G01	AE 1 D
G01	AF 2 C
G01	AL 0 D
G01	AM 1 D
G01	AN 0 D
G01	CC 4 A
G01	CK 0 A
G01	CM 4 C
G01	CN 4 A
G01	DB 0 E
G01	HI 2 B
G01	HJ 4 D
G01	ND 3 D
G01B	BL 2 B
G01C	BL 1 C
G01D	BL 1 D
G01E	BL 1 B
G01F	HJ 2 C
G02	AE 2 A
G02	AF 2 C
G02	AL 1 A
G02	AM 1 D

SHELLS

REF	PAGE
G02	AN 1 A
G03H	HI 0 B
G03J	HI 0 C
G04	HC 1 B
G04	HI 2 B
G05A	IG 0 C
G05E	IG 2 C
G05F	IG 0 C
G06A	IG 3 D
G06B	IG 2 D
H02A	GQ 1 D
H02A_S	GQ 4 E
H03	GF 3 D
H03	GK 1 E
H05	IA 3 C
H16	CM 2 B
H17	CM 2 B
L_E10LED	GF 0 C
M01	GP 2 D
M02	GP 3 B
M04	AE 1 B
M04	AF 2 A
M04	AL 0 B
M04	AM 0 B
M04	AN 0 B
M04A	AE 0 B
M04A	AF 3 A
M04B	AM 1 B
M06DS	IC 1 C
M06PS	IC 2 E
M18	HE 0 D
M18	HH 0 D
M20L	IB 1 D
M20R	IB 2 D
M41	CN 2 C
M55	HJ 0 D
M80L	IA 3 D
M80L	IF 1 D
M80LS	IA 3 B
M80R	IA 3 D
M80R	IF 2 D
M80RS	IA 4 D
M110L	IC 0 B
M110L	IE 1 C
M110R	IC 3 B
M110R	IE 3 C
MCDE2	BG 3 D
OBD	XA 2 D
OBD-II	XF 3 D
R01A	CA 2 D

REF	PAGE
R05A	FA 3 C
R05C	FA 3 C
R08A	CC 0 B
R08A	CN 0 B
R08B	EB 0 A
R08B	EH 0 A
R08C	XB 0 C
R08E	JG 2 C
R08E	JH 1 E
R08F	BC 2 D
R08G	BE 3 C
R08H	KH 3 B
R08H	XC 2 C
R08I	CD 2 B
R08I	CP 2 B
R08M	XA 0 C
R08N	BI 3 B
R08N	BM 2 A
R09	CE 2 C
R09B	CE 2 C
R15	IB 4 D
R18A	FA 0 C
R18B	FA 1 C
R21	XA 0 B
R21	XF 3 C
R21_TGW	BJ 2 B
R21A	XF 2 D
R21B	XF 1 C
R29	CD 1 C
R29	CK 4 D
R29	CP 1 C
R30	CD 2 C
R30	CP 2 C
R31	CD 1 C
R31	CK 3 E
R31	CP 1 C
R_E10LED	GF 1 C
RE01	AC 0 C
RE01	MA 0 B
RE02	AC 1 C
RE02	MA 1 B
RE03	AC 1 C
RE03	MA 2 B
RE04	AC 2 C
RE04	AG 1 B
RE05	AC 3 C
RE06	AD 2 B
RE06	BP 3 B
RE07	AD 3 B
RE07	BP 1 B

REF	PAGE
RE07	CC 1 B
RE07	CN 1 B
RE08	AD 2 D
RE08	CP 3 B
RE09	AD 0 D
RE09	CD 1 B
RE09	CP 1 B
RE10	AD 1 D
RE10	CD 1 B
RE10	CP 1 B
RE11	AD 1 D
RE11	CD 2 B
RE11	CP 2 B
RLY02	AB 2 D
RLY03	IA 3 C
RLY04	IA 4 C
RLY05	AB 1 D
RLY06	KE 0 B
RLY06	KF 2 B
RLY06	KG 0 B
RLY07	DP 1 B
RLY08	AA 2 C
RLY10	GQ 1 C
RLY11	IA 2 C
RLY12	GP 0 B
RLY13	DB 2 B
RLY13_1	DF 2 B
RLY13_3	AI 2 D
RLY14	FB 3 B
RLY14	GK 1 B
RLY15	BM 4 B
RLY16	AH 2 C
RLY17	AH 3 B
RLY23	DF 4 B
RLY24	DF 3 B
RLY26	GI 2 C
RLY27	GI 1 C
RLY28	GI 3 C
RLY33B	DA 1 B
RLY34	EB 4 B
RLY34	EH 4 B
RLY38	GC 2 B
RLY41	HB 4 C
RLYER5	CM 0 C
RLYER6	CM 0 B
S01	GA 1 C
S02	AH 2 B
S02	GA 2 B
S04	HB 0 B
S05	HD 0 B

REF	PAGE
S05	HE 2 D
S05	HH 2 D
S06	BA 1 C
S06	GP 0 C
S07	AJ 3 D
S07B	AJ 2 B
S08	FD 1 B
S09	FD 2 B
S11A	FB 0 C
S11B	FB 1 C
S11C	FB 2 C
S11D	EB 2 D
S11D	EH 2 D
S11E	EB 3 D
S11E	EH 3 D
S11F	EH 3 B
S12	GI 2 B
S14A	GQ 1 C
S15	AB 1 B
S24	AJ 2 D
S24A	DE 4 D
S24C	DE 4 C
S24D	AJ 1 D
S28A	DP 2 C
S28B	DP 3 C
S28C	DP 4 C
S28J	BI 2 B
S28J	BM 1 B
S31	EA 3 B
S31	EC 4 B
S31	EG 3 B
S41	AM 2 C
S43	AH 4 D
S43A	DF 2 E
S43B	DB 2 D
S43C	GA 3 B
S45BA	BB 2 B
S45BB	BB 1 B
S45BC	BB 2 B
S047	BB 3 B
S047A	BB 3 B
S48	GB 3 D
S048B	BB 4 B
S49	GK 2 B
S58	AI 3 B
S59	AI 3 C
S61A	IB 0 D
S75	GJ 1 B
S76	GG 1 C
S80	IF 1 B

REF	PAGE
S80D	IC 2 B
S80P	IC 2 D
S87	HE 0 C
S87	HH 0 C
S88	FC 2 B
S89	BM 4 B
S93	FC 0 B
S97	CH 2 B
S101	DB 1 C
S104	JD 2 C
S104A	NA 1 C
S104B	NA 2 C
S104C	NA 3 C
S104D	NA 4 C
S121	FF 1 C
S169	AB 4 A
S169	AF 2 B
S169	AM 1 C
S169	HI 2 B
S169A	AM 3 C
S171	DA 1 D
S171A	DA 3 D
S171B	FF 3 D
S202	JG 3 C
S202	JH 1 B
S212	EC 1 D
S212	EG 4 B
S223	AH 1 E
S234	IB 3 B
S316	BM 3 B
SK141A	DA 1 A
SK141A	DB 1 A
SK141A	DP 2 A
SK141A	EB 4 A
SK141A	EH 4 A
SK141A	FB 0 A
SK141A	FC 0 A
SK141A	FD 1 A
SK141A	GB 0 A
SK141A	HB 0 A
SK141A	JD 2 A
SK141A	JH 1 A
SK141B	CH 2 A
SK141B	DE 4 A
SK141B	EA 3 A
SK141B	EC 3 A
SK141B	EG 3 A
SK141B	GB 1 A
SK141B	GI 2 A
SKX03D	AE 3 C

REF	PAGE
SKX03D	BD 1 D
SKX03D	CM 0 D
SKX03D	GB 1 D
SKX03D	IB 1 D
SKX03F_A	AA 3 C
SKX03F_A	AB 0 E
SKX03F_A	AE 3 B
SKX03F_A	DF 4 C
SKX03F_A	DP 2 D
SKX03F_A	EB 4 D
SKX03F_A	EH 4 D
SKX03F_A	GI 1 E
SKX03F_A	IA 4 C
SKX03F_A	IB 2 D
SKX03F_A	IF 2 D
SKX03F_A	JG 2 D
SKX03F_A	JH 0 E
SKX03F_A	KE 0 C
SKX03F_A	KF 1 B
SKX03F_A	KG 0 B
SKX03F_B	AE 4 B
SKX03F_B	BH 0 E
SKX03F_B	CH 2 D
SKX03F_B	FB 3 D
SKX03F_B	FC 0 E
SKX03F_B	FD 0 E
SKX03F_B	GK 2 C
SKX03F_B	IC 1 E
sym588_438	AF 4 E
sym1071_138	HH 4 C
sym1073_138	HH 4 C
sym1075_138	HE 4 C
sym1077_138	HE 4 C
TC01	MA 0 D
TC02	MA 2 D
TC03	MB 2 B
TC04	MB 2 C
TC05	MB 2 D
TC06	MB 3 C
TC07	MB 3 D
TC08	MB 1 D
U01	AA 1 A
U01	AB 3 B
U01	CD 1 A
U01	CP 1 A
U01	DB 1 C
V23	CA 3 B
X02	AE 2 C
X02	AL 1 C
X02	AN 1 C

SHELLS

REF	PAGE
X02	CC 4 B
X02	CL 3 B
X02	CN 4 B
X02	HA 0 E
X03	AE 3 D
X03	AG 1 D
X03	AL 1 D
X03	AN 2 D
X03	CB 1 D
X07B	IG 3 C
X07C	IG 4 C
X07D	HD 1 C
X07D	HE 1 C
X07D	HH 2 C
X07H	IG 3 C
X07K	IG 4 C
X11	CB 1 C
X11A	CL 1 C
X17A	NA 1 C
X17A1	NA 1 D
X17B	NA 2 C

REF	PAGE
X17B1	NA 2 D
X17C	NA 3 C
X17C1	NA 3 D
X17D	NA 4 C
X24	HE 4 D
X45	CA 2 B
X62	ND 3 A
X62A	ND 3 A
X66	KD 1 C
X67	KD 1 B
X87	CP 4 D
X89	CD 0 C
X89	CP 0 C
X147B	JH 4 C
X192	CP 2 D
Y11	EA 1 B
Y11	EC 1 B
Y11	EG 1 B
Y12	EA 0 B
Y12	EC 0 B
Y12	EG 0 B

REF	PAGE
Y13	EA 2 D
Y13	EC 1 B
Y13	EG 1 B
Y14	EA 1 D
Y14	EC 0 E
Y14	EG 0 E
Y15	EA 4 D
Y15	EC 2 D
Y15	EG 2 E
Y16	EA 3 D
Y16	EC 2 D
Y16	EG 2 E
Y18A	DP 1 D
Y18B	DP 4 D
Y18G	DA 3 B
Y18G	DP 0 D
Y18H	DA 3 B
Y18H	DP 0 B
Y25A	EB 1 B
Y25A	EH 1 A
Y29A	EB 2 B

REF	PAGE
Y29A	EH 2 A
Y35	CB 2 B
Y35	CC 0 A
Y35	CL 3 E
Y35	CN 1 A
Y35A	CC 1 B
Y35A	CN 1 B
Y35E	CL 3 D
Y42	HA 1 D
Y51	FA 4 C
Y53	CA 0 C
Y57	EA 1 D
Y57	EC 3 D
Y57	EG 3 D
Y57A	ED 0 C
Y64	DE 1 B
Y81	CK 2 D
Y81A	CD 1 C
Y81A	CP 1 C
Y100	ED 4 C
Y106	EC 3 D

REF	PAGE
Y106	EG 3 D
Y110	DA 4 C
Z01	XA 0 B
Z02	MA 3 C
Z03A	BH 0 C
Z03B	BH 2 B
Z03C	BI 1 D
Z03C	BM 1 D
Z03D	BI 3 D
Z03D	BM 3 D
Z04	BH 1 B
Z05	CH 3 D
Z05	FB 1 D
Z05	FC 3 D
Z05	FD 2 D
Z05	FF 1 D
Z05	GQ 2 C
Z06	BB 1 E
Z06	GA 3 B
Z06	JA 1 D
Z08	BC 0 C

REF	PAGE
Z10	XF 2 D
Z10CA	BH 2 D
Z10CB	BH 3 D
Z10FA	BH 2 D
Z10FB	BH 3 D
Z13	GI 1 D
Z15	BH 1 E
Z16	BH 1 D
Z17	HC 1 D
Z17	HI 2 D
Z18	HC 1 D
Z18	HI 3 C
Z19	HC 2 D
Z19	HI 3 C
Z20	HC 2 D
Z20	HI 4 C
Z21	BE 2 C
Z23	BJ 2 A

REFERENCES

REF	DESCRIPTION	PAGE
		AB 3 E
		DA 1 A
		DB 3 A
		DF 1 A
A03A	INSTRUMENT CLUSTER A	BA 0 D
A03B	INSTRUMENT CLUSTER B	BA 2 C
A03C	INSTRUMENT CLUSTER C	BB 0 C
A03S	SECONDARY GAUGES	BD 1 B
A04	REFRIGERATOR	HD 1 B
A04	REFRIGERATOR	HE 1 C
A04	REFRIGERATOR	HH 1 C
A04A	REFRIGERATOR	HE 1 D
A04A	REFRIGERATOR	HH 1 D
A07A	RADIO	BC 4 B
A07A	RADIO	KA 0 C
A07A	RADIO	KB 2 C
A07A	RADIO	KC 0 B
A07A	RADIO	KD 1 B
A07A	RADIO	XC 4 D
A12A	CONTROL UNIT, ABS (ANTI-LOCK BRAKE SYSTEM	EA 0 C
A12B	CONTROL UNIT, ABS (ANTI-LOCK BRAKE SYSTEM	EC 0 C
A12B	CONTROL UNIT, ABS (ANTI-LOCK BRAKE SYSTEM	ED 0 A
A12B	CONTROL UNIT, ABS (ANTI-LOCK BRAKE SYSTEM	EG 0 C
A13B	TECU AMT-F	DA 3 D
A13E	Control unit, TECU (automatic transmissio	DA 2 B
A14C	CONTROL UNIT EMS CUMMINS ISX '16	CC 0 D
A14C	CONTROL UNIT EMS CUMMINS ISX '16	CD 0 E
A14D	CONTROL UNIT EMS CUMMINS ISX '17	CN 0 D
A14D	CONTROL UNIT EMS CUMMINS ISX '17	CP 0 E
A15	Control unit, SRS (Supplementary Restra	JA 1 C
A16	Control unit, ECS (Electronic Controlled	EB 0 C
A16	Control unit, ECS (Electronic Controlled	EH 0 C
A17	Control unit, VECU (Vehicle ECU)	AG 1 C
A17	Control unit, VECU (Vehicle ECU)	AH 0 D
A17	Control unit, VECU (Vehicle ECU)	AI 0 A
A17	Control unit, VECU (Vehicle ECU)	AJ 1 C
A19E	SHIFT SELECTOR ALLISON	DF 0 E
A27	LIGHT CONTROL MODULE	GA 4 C
A27	LIGHT CONTROL MODULE	GB 1 C
A27	LIGHT CONTROL MODULE	GG 0 A
A27	LIGHT CONTROL MODULE	GK 0 A
A27	LIGHT CONTROL MODULE	IE 2 A
A34	CONTROL UNIT, CLIMATE	HA 2 B
A36	Control unit, BBM (Body Builder Module)	BI 0 C
A36	Control unit, BBM (Body Builder Module)	BM 0 C
A38	Control unit, FMS, satellite communicati	BE 0 C
A38A	CONTROL UNIT, MOBILE MAX II	BG 0 C
A46	Control unit, LECM (Living Enviroment Co	HB 4 B
A46	Control unit, LECM (Living Enviroment Co	HD 3 A
A46	Control unit, LECM (Living Enviroment Co	HE 3 A

REF	DESCRIPTION	PAGE
A46	Control unit, LECM (Living Enviroment Co	HH 3 A
A46	Control unit, LECM (Living Enviroment Co	XC 2 B
A48	TV	KC 0 C
A48	TV	KG 0 C
A51	DISPLAY, SIDE SENSOR	JF 2 C
A55A	EATON AUTO/ULTRA SHIFT GEN 3 ECU	DB 1 D
A56	STEREO AMPLIFIER	KC 0 C
A56	STEREO AMPLIFIER	KG 0 C
A57A	CONTROL UNIT ALLISON TRANS. GEN 4	DE 0 A
A57A	CONTROL UNIT ALLISON TRANS. GEN 4	DF 0 C
A58A	ALLISON TRANSMISSION	DE 0 D
A60	CONTROL UNIT LANE DEPARTURE WARNING SYSTE	JG 1 B
A61A	BATTERY MONITOR, MIDTRONICS	HJ 4 D
A70A	PUSH BUTTON SHIFT CONTROL	DB 0 C
A72	LOW VOLTAGE DISCONNECT	AA 2 C
A72	LOW VOLTAGE DISCONNECT	HB 2 D
A80	Airdryer, electronical controlled	FA 1 C
A102A	CONTROL UNIT, GPS RECEIVER TELEMATICS GAT	BJ 2 D
A102B		BJ 0 D
A109	Control unit, GSECU (Gearshift ECU)	DA 1 C
A131A	LVD, POWER SEPARATOR	HJ 4 B
A132	CONTROL UNIT TIRE PRESSURE MONITORING	FG 0 C
A132B	TPM MODULE	FG 2 C
A137	DEF CONTROL MODULE,	CK 0 C
A138	PUMP UNIT, ADBLUE	CK 1 E
A138A	PUMP UNIT, ADBLUE (CUMMINS)	CC 1 C
A147	Control Unit, Fuel Filter Module	BP 2 D
A148	Control Unit, Heated Windshield	IB 3 C
A158	Control unit, Audio	KD 3 C
A158	Control unit, Audio	KE 1 C
A158	Control unit, Audio	KF 2 C
A158	Control unit, Audio	KG 1 B
A158	Control unit, Audio	KH 1 C
A158A	CONTROL UNIT, AUDIO INFOTAINMENT	XC 0 B
A170	Control panel, climate	HJ 0 B
A186	Control Unit, PCCU (Parking Cooler Contro	HJ 0 C
A225	FUSE HOLDER 4 FUSES	AB 4 D
A232	SYSTEM BENDIX FUSION	JH 2 B
B06	Sensor, air pressure, air tank	AI 1 C
B06A	SENSOR, AIR PRESSURE B-TANK / FRONT BRAK	BA 3 D
B06AP	SENSOR AIR PRESSURE BRAKE APPLICATION	BA 2 D
B06B	SENSOR, AIR PRESSURE A-TANK / REAR BRAK	BA 3 D
B07	SENSOR FUEL LEVEL	BA 3 D
B09	SENSOR OIL TEMP GEARBOX	BA 4 D
B13	SENSOR WHEEL SPEED LH 1ST AXLE	EA 1 B
B13	SENSOR WHEEL SPEED LH 1ST AXLE	EC 2 B
B13	SENSOR WHEEL SPEED LH 1ST AXLE	EG 2 B
B14	SENSOR WHEEL SPEED RH 1ST AXLE	EA 1 B
B14	SENSOR WHEEL SPEED RH 1ST AXLE	EC 1 B
B14	SENSOR WHEEL SPEED RH 1ST AXLE	EG 1 B

REFERENCES

REF	DESCRIPTION	PAGE
B15	SENSOR WHEEL SPEED LH 2ND AXLE	EA 0 D
B15	SENSOR WHEEL SPEED LH 2ND AXLE	EC 0 B
B15	SENSOR WHEEL SPEED LH 2ND AXLE	EG 0 B
B16	SENSOR, WHEEL SPEED RH 2ND AXLE	EA 1 D
B16	SENSOR, WHEEL SPEED RH 2ND AXLE	EC 4 D
B16	SENSOR, WHEEL SPEED RH 2ND AXLE	EG 4 D
B17	SENSOR, WHEEL SPEED LH 3RD AXLE	EA 2 D
B17	SENSOR, WHEEL SPEED LH 3RD AXLE	EC 1 D
B17	SENSOR, WHEEL SPEED LH 3RD AXLE	EG 1 D
B18	SENSOR WHEEL SPEED RH 3RD AXLE	EA 3 D
B18	SENSOR WHEEL SPEED RH 3RD AXLE	EC 2 D
B18	SENSOR WHEEL SPEED RH 3RD AXLE	EG 2 D
B22A	SENSOR AMBIENT AIR TEMP.	BA 3 A
B22A_S	AMBIENT TEMP SERVICE	BA 4 A
B22B	SENSOR AMBIENT AIR TEMP.	BA 3 A
B22C	SENSOR, AMBIENT AIR TEMP	CC 3 D
B22C	SENSOR, AMBIENT AIR TEMP	CN 3 D
B25	SENSOR ACCELERATOR PEDAL	AI 1 D
B25A	SENSOR ACCELERATOR PEDAL	AI 4 E
B30A	SENSOR, CHASSIS LEVEL DRIVE AXLE	EB 2 E
B30A	SENSOR, CHASSIS LEVEL DRIVE AXLE	EH 2 E
B38RC	SENSOR OIL TEMP REAR CENTER AXLE	BB 3 D
B38RF	SENSOR OIL TEMP REAR FRONT AXLE	BB 3 D
B38RR	SENSOR OIL TEMP REAR REAR AXLE	BB 4 D
B39	SENSOR AIR RESTRICTION	BB 0 B
B49	SENSOR, STEERING ANGLE	ED 1 D
B50	SENSOR, YAW-RATE ESP	ED 2 D
B55A	SENSOR, AIR PRESSURE, SUSPENSION BELLOWS,	EB 0 D
B55A	SENSOR, AIR PRESSURE, SUSPENSION BELLOWS,	EH 0 D
B55B	SENSOR, AIR PRESSURE , SUSPENSION BELLOWS	EH 1 D
B56	Sensor, air pressure, suspension bellows	BA 3 B
B58A	SENSOR, AIR PRESSURE, SUSPENSION BELLOWS,	EB 1 D
B58A	SENSOR, AIR PRESSURE, SUSPENSION BELLOWS,	EH 1 D
B58R	SENSOR AIR PRESSURE REAR SUSPENSION	BA 2 D
B59	Sensor, Indoor Temp.	HA 2 B
B60A	SPEAKER LEFT DASH	KA 2 E
B60A	SPEAKER LEFT DASH	KB 3 E
B60A	SPEAKER LEFT DASH	KC 1 E
B60A	SPEAKER LEFT DASH	KE 2 E
B60A	SPEAKER LEFT DASH	KF 3 E
B60A	SPEAKER LEFT DASH	KG 1 E
B60B	SPEAKER RIGHT DASH	KA 2 E
B60B	SPEAKER RIGHT DASH	KB 2 E
B60B	SPEAKER RIGHT DASH	KC 2 E
B60B	SPEAKER RIGHT DASH	KE 2 E
B60B	SPEAKER RIGHT DASH	KF 2 E
B60B	SPEAKER RIGHT DASH	KG 2 E
B60C	SPEAKER LEFT DOOR	KA 1 E
B60C	SPEAKER LEFT DOOR	KB 4 E
B60C	SPEAKER LEFT DOOR	KC 0 E

REF	DESCRIPTION	PAGE
B60C	SPEAKER LEFT DOOR	KE 1 E
B60C	SPEAKER LEFT DOOR	KF 4 E
B60C	SPEAKER LEFT DOOR	KG 0 E
B60D	SPEAKER RIGHT DOOR	KA 1 E
B60D	SPEAKER RIGHT DOOR	KB 2 E
B60D	SPEAKER RIGHT DOOR	KC 0 E
B60D	SPEAKER RIGHT DOOR	KE 1 E
B60D	SPEAKER RIGHT DOOR	KF 2 E
B60D	SPEAKER RIGHT DOOR	KG 0 E
B60E	SPEAKER LEFT UPPER	KB 0 D
B60E	SPEAKER LEFT UPPER	KF 0 D
B60F	SPEAKER RIGHT UPPER	KB 0 D
B60F	SPEAKER RIGHT UPPER	KF 0 D
B60G	SPEAKER LEFT LOWER	KC 2 D
B60G	SPEAKER LEFT LOWER	KG 2 D
B60G_1	SPEAKER LEFT LOWER	KG 2 E
B60H	SPEAKER RIGHT LOWER	KC 2 D
B60H	SPEAKER RIGHT LOWER	KG 2 D
B60H_1	SPEAKER RIGHT LOWER	KG 2 E
B60I	SPEAKER SUBWOOFER	KC 2 D
B60I	SPEAKER SUBWOOFER	KG 3 E
B60J	SPEAKER LEFT UPPER	KB 1 E
B60J	SPEAKER LEFT UPPER	KF 1 E
B60K	SPEAKER RIGHT UPPER	KB 1 E
B60K	SPEAKER RIGHT UPPER	KF 1 E
B60L_H2	SPEAKER, LEFT REAR	KB 1 B
B60L_H2	SPEAKER, LEFT REAR	KF 1 B
B60L_H4	SPEAKER, LEFT REAR	KB 1 C
B60L_H4	SPEAKER, LEFT REAR	KF 1 C
B60M_H2	SPEAKER, RIGHT REAR	KB 0 B
B60M_H2	SPEAKER, RIGHT REAR	KF 0 B
B60M_H4	SPEAKER, RIGHT REAR	KB 0 C
B60M_H4	SPEAKER, RIGHT REAR	KF 0 C
B60N	SPEAKER, LEFT UPPER	KC 4 D
B60N	SPEAKER, LEFT UPPER	KG 4 D
B60P	SPEAKER, RIGHT UPPER	KC 4 D
B60P	SPEAKER, RIGHT UPPER	KG 4 D
B60R	SPEAKER LEFT UPPER	KC 4 B
B60R	SPEAKER LEFT UPPER	KG 4 B
B60S	SPEAKER RIGHT UPPER	KC 4 B
B60S	SPEAKER RIGHT UPPER	KG 4 B
B61A	TWEETER LEFT DASH	KA 2 E
B61A	TWEETER LEFT DASH	KB 3 E
B61A	TWEETER LEFT DASH	KC 0 E
B61A	TWEETER LEFT DASH	KE 2 E
B61A	TWEETER LEFT DASH	KF 3 E
B61A	TWEETER LEFT DASH	KG 0 E
B61B	TWEETER RIGHT DASH	KA 1 E
B61B	TWEETER RIGHT DASH	KB 2 E
B61B	TWEETER RIGHT DASH	KC 1 E

REFERENCES

REF	DESCRIPTION	PAGE
B61B	TWEETER RIGHT DASH	KE 1 E
B61B	TWEETER RIGHT DASH	KF 2 E
B61B	TWEETER RIGHT DASH	KG 1 E
B62	Socket, TV Headphone	KC 0 C
B62	Socket, TV Headphone	KG 0 C
B63	Microphone, (handsfree)	KD 2 B
B64A	SPEAKER BENDIX FUSION LEFT DASH	JH 4 D
B64B	SPEAKER BENDIX FUSION RIGHT DASH	JH 4 D
B68	Sensor, output shaft speed, gearbox	AI 0 D
B68	Sensor, output shaft speed, gearbox	CC 2 C
B68	Sensor, output shaft speed, gearbox	CL 1 B
B68	Sensor, output shaft speed, gearbox	CN 2 C
B68_B	Sensor, output shaft speed, gearbox	AI 1 E
B78	SIDE SENSOR	JF 1 C
B80	SENSOR, ETHER START	CA 1 B
B82A	SENSOR, ACC RADAR FLR-20	JE 0 D
B96	Sensor, NOx	CK 3 B
B96B	Sensor, NOx	CK 2 B
B105A	SENSOR, RETARDER TEMP	DE 3 D
B121	Sensor, Low level washer fluid	GP 3 B
B122A	SENSOR EXHAUST TEMP. CATALYST	CL 2 E
B122B	SENSOR CATALYST OUTLET TEMP. 2	CL 2 B
B123	SENSOR LOW COOLANT	CB 2 D
B123A	SENSOR, LOW COOLANT	CB 3 D
B123A	SENSOR, LOW COOLANT	CL 2 E
B123B	SENSOR, LOW COOLANT	CC 1 C
B123B	SENSOR, LOW COOLANT	CN 1 C
B142B	Sensor, AdBlue level and temperature	CC 3 C
B142C	Sensor, AdBlue level and temperature	CD 3 B
B142C	Sensor, AdBlue level and temperature	CK 1 B
B142C	Sensor, AdBlue level and temperature	CP 3 A
B152	SENSOR, BRAKE AIRPRESSURE, FRONT	ED 2 C
B153	SENSOR, BRAKE AIRPRESSURE, REAR	ED 3 C
B177	SENSOR AIR PRESSURE, SUSPENSION BELLOWS,	ED 3 B
B185A	SENSOR OXYGEN OUTLET EGO	CL 1 D
B300B	METHANE SENSOR ENGINE	CM 3 D
B300C	METHANE SENSOR SLEEPER	CM 2 D
B310	Sensor, Particulate Matter	CK 2 B
B319	SENSOR ALARM CO	CM 1 D
B319_B	SENSOR ALARM CO SLEEPER	CM 2 D
E05A	5TH WHEEL LAMP	GG 1 C
E05A	5TH WHEEL LAMP	GH 1 C
E05B	5TH WHEEL LAMP, HIGH	GG 2 C
E05B	5TH WHEEL LAMP, HIGH	GH 0 C
E05C	5TH WHEEL LAMP,DUAL	GG 2 C
E05C	5TH WHEEL LAMP,DUAL	GH 1 C
E05D	5TH WHEEL LAMP,DUAL	GG 3 C
E05D	5TH WHEEL LAMP,DUAL	GH 0 C
E05E	BACK OF CAB LAMP, D.S.	GG 3 C
E05E	BACK OF CAB LAMP, D.S.	GH 1 C

REF	DESCRIPTION	PAGE
E05F	BACK OF CAB LAMP, P.S.	GG 3 C
E05F	BACK OF CAB LAMP, P.S.	GH 2 C
E05K	5TH WHEEL LAMP	GG 2 C
E06	LAMP BACKUP	GK 1 E
E06LED	LAMP LED BACKUP	GK 1 E
E07L	Lamp, Fog Light	GE 2 C
E07R	Lamp, Fog Light	GE 3 C
E08L	Lamp, Driving Light	GE 3 C
E08R	Lamp, Driving Light	GE 3 C
E10	LAMP, TAIL LIGHT	GF 3 B
E10L	LAMP TAIL LIGHT LEFT	GF 3 D
E10LA	LAMP TAIL LIGHT LEFT	GF 0 C
E10R	LAMP TAIL LIGHT RIGHT	GF 4 D
E10RA	LAMP TAIL LIGHT RIGHT	GF 1 C
E11L	Lamp, Side Repeater	GA 1 D
E11L	Lamp, Side Repeater	IE 2 C
E11R	Lamp, Side Repeater	GA 2 D
E11R	Lamp, Side Repeater	IE 2 C
E12A	LAMP, MARKER	GC 1 D
E12B	LAMP, MARKER	GC 1 D
E12C	LAMP, MARKER	GC 2 D
E12D	LAMP, MARKER	GC 2 D
E12E	LAMP, MARKER	GC 2 D
E13L	Lamp, Park/Turn	GD 1 C
E13R	Lamp, Park/Turn	GD 1 C
E14L	WARNING LAMP SNOWPLOW	GJ 1 D
E14R	WARNING LAMP SNOWPLOW	GJ 1 D
E16L	Lamp, Door instep light, left	IA 1 D
E16R	Lamp, Door instep light, right	IA 1 D
E17C	Lamp Flourescent	HE 3 D
E17C	Lamp Flourescent	HH 4 B
E17C_H2	LAMP, FLOURESCENT	HD 3 C
E17C_H4	LAMP, FLOURESCENT	HD 3 C
E17D	LAMP, WORKCENTRE FLUORESCENT	HE 4 C
E17L	LAMP, FRONT OVRHEAD LEFT	IA 0 D
E17L2	LAMP, OVERHEAD	IA 1 B
E17R	LAMP, FRONT OVRHEAD RIGHT	IA 0 D
E18A	LAMP, LOWER D.S.	HD 4 D
E18B	LAMP, UNDER CABINET D.S.	HD 4 C
E18C	LAMP, UPPER D.S.	HE 2 B
E18C	LAMP, UPPER D.S.	HH 2 C
E18D	LAMP, UPPER P.S.	HE 2 B
E18E	LAMP, LOWER D.S.	HE 2 C
E18F	LAMP, LOWER P.S.	HE 3 C
E18G	LAMP, UPPER P.S.	HD 2 C
E18H	LAMP, UPPER D.S.	HD 2 C
E18J	LAMP, LOWER D.S.	HD 3 D
E18K	LAMP, TABLE	HD 3 D
E18L	LAMP, UNDER CABINET D.S.	HH 3 B
E18M	LAMP, UPPER D.S.	HD 1 C

REFERENCES

REF	DESCRIPTION	PAGE
E18N	LAMP, CENTER	HH 2 B
E18P	LAMP, LOWER D.S.	HH 3 C
E18R	LAMP, LOWER P.S.	HH 3 B
E20A	Lamp Ashtray Illumination	IG 1 C
E22A	LAMP, ROOF SIGN ILLUMINATION	GC 0 D
E22B	LAMP, ROOF SIGN ILLUMINATION	GC 0 D
E22C	LAMP, ROOF SIGN ILLUMINATION	GC 0 D
E23A	LAMP, LUGGAGE D.S.	HD 2 B
E23B	LAMP, LUGGAGE P.S.	HD 2 B
E26L	Lamp, Headlamp Module	GD 2 B
E26L_1	Lamp, Headlamp Module	GD 3 D
E26R	Lamp, Headlamp Module	GD 3 B
E26R_1	Lamp, Headlamp Module	GD 3 D
E28	Parking heater, ADR	HB 4 D
E28A	PARK HEATER AUX AC	HJ 0 C
E30L	Lamp, Headlamp	GD 0 C
E30R	Lamp, Headlamp	GD 2 C
E32	HVAC UNIT	HB 3 D
E32A	HVAC UNIT	HA 2 D
E36A	LAMP, SUNVISOR	GC 3 D
E36B	LAMP, SUNVISOR	GC 3 D
E36C	LAMP, SUNVISOR	GC 3 D
E36D	LAMP, SUNVISOR	GC 4 D
E36E	LAMP, SUNVISOR	GC 4 D
E37	Lamp, LECM panel	HE 1 B
E37	Lamp, LECM panel	HH 1 B
E39	LAMP, LICENSE PLATE ILLUMINATION	GF 2 C
E43L	Lamp, Driving/Fog	GE 1 C
E43R	Lamp, Driving/Fog	GE 2 C
E80L	Lamp, Additional module, left	BP 3 B
E81A	UNDER CAB EXT. LAMP	IH 1 C
E81B	UNDER CAB EXT. LAMP	IH 1 C
E81C	UNDER CAB EXT. LAMP	IH 1 C
E81D	UNDER CAB EXT. LAMP	IH 2 C
E81E	UNDER CAB EXT. LAMP	IH 2 C
E81F	UNDER CAB EXT. LAMP	IH 2 C
E81G	UNDER CAB EXT. LAMP	IH 3 C
E81H	UNDER CAB EXT. LAMP	IH 3 C
E81J	UNDER CAB EXT. LAMP	IH 3 C
EM01	CONNECOTR CUMMINS SCR	CD 2 D
EM02	CONNECTOR CROSSOVER CUMMINS	CD 3 C
EM03	CONNECTOR CUMMINS DPF	CD 4 D
EM04	SENSOR DEF QUAL. CUMMINS	CD 4 A
F01	DCP Power/ Power Mirror/ TGW	AB 2 D
F01	DCP Power/ Power Mirror/ TGW	BJ 0 A
F01	DCP Power/ Power Mirror/ TGW	IC 2 A
F02	Radio/ Radio with Amplifier	AB 3 D
F02	Radio/ Radio with Amplifier	BA 1 A
F02	Radio/ Radio with Amplifier	KA 1 A
F02	Radio/ Radio with Amplifier	KB 2 A

REF	DESCRIPTION	PAGE
F02	Radio/ Radio with Amplifier	KC 0 A
F02	Radio/ Radio with Amplifier	KE 1 A
F02	Radio/ Radio with Amplifier	KF 2 A
F02	Radio/ Radio with Amplifier	KG 0 A
F03	Driver Window, Heated mirrors	AB 3 D
F03	Driver Window, Heated mirrors	IC 1 A
F04	RH Window	AB 3 D
F04	RH Window	IC 3 A
F05	{ACC/APU Power}	AB 3 D
F08	LCM1	AB 3 C
F08	LCM1	GB 3 A
F09	City Horn, Air Horn	AB 3 C
F09	City Horn, Air Horn	GQ 1 A
F10	LCM2	AB 3 C
F10	LCM2	GB 3 B
F11	Batt. Expansion/ Sec. Instrument	AB 3 C
F11	Batt. Expansion/ Sec. Instrument	BD 2 A
F12	Diagnostic Tool/ Road Relay	AB 4 C
F12	Diagnostic Tool/ Road Relay	BC 1 A
F12	Diagnostic Tool/ Road Relay	XA 4 A
F13	TGW	AB 4 C
F13	TGW	BJ 0 A
F14	ECS/ Beacon Lamps	AB 4 C
F14	ECS/ Beacon Lamps	EB 4 A
F14	ECS/ Beacon Lamps	EH 4 A
F14	ECS/ Beacon Lamps	GJ 1 A
F15	Key Switch Bat	AB 1 B
F16	LCM3	AB 1 B
F16	LCM3	GB 3 A
F17	LCM6	AB 2 B
F17	LCM6	GB 3 A
F18	LCM5	AB 2 B
F18	LCM5	GB 3 B
F19	I-Shift	AB 2 B
F19	I-Shift	DA 0 A
F20	Batt Cluster Radio,	AB 2 B
F20	Batt Cluster Radio,	BA 0 A
F20	Batt Cluster Radio,	KA 1 A
F20	Batt Cluster Radio,	KB 3 A
F20	Batt Cluster Radio,	KC 1 A
F20	Batt Cluster Radio,	KE 1 A
F20	Batt Cluster Radio,	KF 3 A
F20	Batt Cluster Radio,	KG 1 A
F21	Cummins IGN	AB 0 E
F21	Cummins IGN	CC 2 A
F21	Cummins IGN	CL 1 A
F21	Cummins IGN	CN 2 A
F22	EFRC IGN	AB 0 E
F22	EFRC IGN	AC 2 A
F23	Climate Control Ign.	AB 0 E

REFERENCES

REF	DESCRIPTION	PAGE
F23	Climate Control Ign.	HA 0 B
F24	NOT USED	AB 1 E
F25	Heated Seats	AB 1 E
F25	Heated Seats	IB 2 A
F26	Wiper	AB 1 E
F26	Wiper	GP 0 A
F27	Interaxle/ Interwheel	AB 1 E
F27	Interaxle/ Interwheel	FD 2 A
F28	SRS	AB 1 E
F28	SRS	JA 1 A
F29	Camera Prep/ BB IGN-Z	AB 2 E
F29	Camera Prep/ BB IGN-Z	BH 1 A
F30	Snow Plow LPS LH	AB 2 E
F30	Snow Plow LPS LH	GI 2 A
F31	Touch Lock/ Heated Windshield	AB 2 E
F31	Touch Lock/ Heated Windshield	FF 1 A
F31	Touch Lock/ Heated Windshield	IB 3 A
F32	Snow Plow LPS RH	AB 3 E
F32	Snow Plow LPS RH	GI 1 A
F33	Not Used	AB 3 E
F34	PTO	AB 3 E
F34	PTO	DP 2 A
F36	Not Used	AA 3 D
F37	NOT USED	AA 3 D
F38	Not Used	AA 4 D
F39	Not Used	AA 4 D
F40	Not Used	AA 4 D
F41	Not Used	AA 4 D
F42	12V Socket, Cooler, Sleeper	AA 0 D
F42	12V Socket, Cooler, Sleeper	IG 3 A
F43	Roof Sign/ Body Builder	AA 0 D
F43	Roof Sign/ Body Builder	BH 0 A
F43	Roof Sign/ Body Builder	GC 2 A
F44	Not Used	AA 0 D
F45	Auxiliary Switches 3 / 4	AA 0 D
F45	Auxiliary Switches 3 / 4	NA 3 A
F46	LECM1 Fuses FB1, FB2, FB7	AA 1 D
F46	LECM1 Fuses FB1, FB2, FB7	HB 2 A
F47	LECM4 Fuses FB3, FB5, FB9, FB10	AA 1 D
F47	LECM4 Fuses FB3, FB5, FB9, FB10	HB 3 A
F48	LECM3 HVAC Fan	AA 1 D
F48	LECM3 HVAC Fan	HB 3 A
F49	LCM4	AA 0 B
F49	LCM4	GB 3 B
F50	LECM2 Fuses FB6, FB8	AA 0 B
F50	LECM2 Fuses FB6, FB8	HB 2 A
F51	Climate Control, AC Blower Batt.	AA 0 B
F51	Climate Control, AC Blower Batt.	HA 0 A
F52	LVD Sense/ Qualcomm/ Mobile Max 2	AA 0 B
F52	LVD Sense/ Qualcomm/ Mobile Max 2	BE 2 A

REF	DESCRIPTION	PAGE
F52	LVD Sense/ Qualcomm/ Mobile Max 2	BG 0 A
F53	Central Locks Batt.	AA 1 B
F53	Central Locks Batt.	IF 2 A
F54	ABS 1.	AA 1 B
F54	ABS 1.	EA 2 A
F54	ABS 1.	EC 2 A
F54	ABS 1.	EG 2 A
F55	FUSE, BENDIX FUSION	AA 1 B
F55	FUSE, BENDIX FUSION	JH 0 A
F56	FUSE, METHANE DETECT	AA 2 E
F56	FUSE, METHANE DETECT	CM 0 A
F57	LDWS	AA 3 E
F57	LDWS	JG 2 A
F57	LDWS	JH 0 A
F58	LCM/LCP IGN./ Central Locks/ IGN.	AA 3 E
F58	LCM/LCP IGN./ Central Locks/ IGN.	GA 1 A
F59	Volvo Link/ QualComm IGN./Mobile Max 2	AA 3 E
F59	Volvo Link/ QualComm IGN./Mobile Max 2	BE 2 A
F59	Volvo Link/ QualComm IGN./Mobile Max 2	BG 0 A
F60	LECM IGN.	AA 3 E
F60	LECM IGN.	HB 3 A
F61	Road Relay Ign.	AA 4 E
F61	Road Relay Ign.	BC 1 A
F62	BACKUP LAMPS	AA 4 E
F62	BACKUP LAMPS	GK 3 A
F63	Lift Axle/ BB Reverse/ Susp. Dump/ Fifth	AA 3 D
F63	Lift Axle/ BB Reverse/ Susp. Dump/ Fifth	FC 1 A
F64	BB IGN-Y	AA 3 D
F64	BB IGN-Y	BH 1 A
F65	BB IGN-X	AA 3 D
F65	BB IGN-X	BH 0 A
F66	IGN. EXP/ Sec. Instrument	AA 3 D
F66	IGN. EXP/ Sec. Instrument	BD 2 A
F67	VORAD/ ECS/ACC	AA 4 D
F67	VORAD/ ECS/ACC	EB 3 A
F67	VORAD/ ECS/ACC	EH 3 A
F67	VORAD/ ECS/ACC	JE 0 A
F68	I SHIFT GECU	AA 4 D
F68	I SHIFT GECU	DA 1 B
F69	ISHIFT TECU	AA 4 D
F69	ISHIFT TECU	DA 0 B
F76	Not Used	AA 0 D
F77	12V Power Outlets, Dash	AA 0 D
F77	12V Power Outlets, Dash	IG 0 A
F78	Dome/ Door Lamps	AA 1 D
F78	Dome/ Door Lamps	IA 2 A
F79	CB Power Studs	AA 1 D
F79	CB Power Studs	IG 2 A
F80	12V Socket, D.S. Cab, Sleeper	AA 1 D
F80	12V Socket, D.S. Cab, Sleeper	IG 4 A

REFERENCES

REF	DESCRIPTION	PAGE
F81	Auxiliary Switches 1 / 2	AA 1 D
F81	Auxiliary Switches 1 / 2	NA 1 A
F82	12V Power Overhead	AA 2 D
F82	12V Power Overhead	IG 2 A
F90	FUSE SINK PUMP	HE 0 C
F90	FUSE SINK PUMP	HH 0 C
FB03	FUSE, BAT. POWER OMNIVISION	BE 3 B
FB8	FUSE REMOTE SENSE ALT.	AM 4 C
FB08	FUSE METHANE DETECTION	CM 4 C
FB09	FUSE INVERTER	HI 1 B
FE1	TRAILER STOP RELAY	AC 0 B
FE1	TRAILER STOP RELAY	MA 1 A
FE2	RELAY TRAILER CLEARANCE	AC 1 B
FE2	RELAY TRAILER CLEARANCE	MA 1 A
FE3	RELAY TRAILER MARKER	AC 1 B
FE3	RELAY TRAILER MARKER	MA 2 A
FE4	EMS MAIN VOLVO/ CUMMINS	AC 2 C
FE4	EMS MAIN VOLVO/ CUMMINS	AG 2 A
FE5	ACM EMS	AC 2 C
FE5	ACM EMS	AG 3 A
FE5	ACM EMS	BP 2 A
FE6	VECU/ WATER IN FUEL SW/ ENG. BRAKE	AC 2 C
FE6	VECU/ WATER IN FUEL SW/ ENG. BRAKE	AG 0 A
FE7	BODY BUILDER MODULE	AC 2 C
FE7	BODY BUILDER MODULE	AG 0 A
FE8	EMS COM 1	AC 3 C
FE8	EMS COM 1	AG 3 A
FE8	EMS COM 1	CL 3 A
FE9	EMS COMP 2	AC 3 C
FE9	EMS COMP 2	AG 4 A
FE9	EMS COMP 2	CL 3 A
FE10	TRAILER AUX/ABS	AC 3 C
FE10	TRAILER AUX/ABS	MA 3 A
FE11	ABS IGN	AC 3 C
FE11	ABS IGN	EA 2 A
FE11	ABS IGN	EC 2 A
FE11	ABS IGN	EG 2 A
FE12	FUEL HEAT	AC 3 C
FE12	FUEL HEAT	CE 2 A
FE13	AIR DRYER	AC 4 C
FE13	AIR DRYER	FA 2 A
FE14	TPM	AC 4 C
FE14	TPM	FG 0 A
FE15	LNG FAN	AC 4 C
FE16	FAN FUEL COOLER	AC 4 C
FE17	CES/ SPARE	AD 0 B
FE17	CES/ SPARE	CP 3 A
FE18	CUMMINS ISX/ ISX-G	AD 0 B
FE18	CUMMINS ISX/ ISX-G	CC 1 A
FE18	CUMMINS ISX/ ISX-G	CL 3 A

REF	DESCRIPTION	PAGE
FE18	CUMMINS ISX/ ISX-G	CN 1 A
FE19	AUTO TRANS: ALLISON/ EATON	AD 1 B
FE19	AUTO TRANS: ALLISON/ EATON	DB 4 A
FE19	AUTO TRANS: ALLISON/ EATON	DF 0 A
FE20	TRAILER LEFT TURN	AD 1 B
FE20	TRAILER LEFT TURN	MA 3 B
FE21	TRAILER RIGHT TURN	AD 1 B
FE21	TRAILER RIGHT TURN	MA 3 B
FE22	FUSE CUMMINS ICM	AD 1 B
FE23	SPARE	AD 2 B
FE24	FUSE CUMMINS MAF	AD 2 B
FE25	UREA HEATED LINES	AD 0 B
FE25	UREA HEATED LINES	CD 1 A
FE25	UREA HEATED LINES	CP 1 A
FEM01	FUSE, MAIN POWER	AB 3 A
FEM02	FUSE, GROUND PROTECTION	AN 2 C
FEM03A	CIRCUIT BREAKER LIFT GATE	ND 3 D
FEM03B	CIRCUIT BREAKER LIFT GATE	ND 3 D
FFB06A	AUX BATT TO PARK HTR	HJ 2 B
FFB07A	AUX BATT TO BATT MONITOR	HJ 3 B
FFB08A	FUSE, INLINE LVD TO BATTERY MONITOR	HJ 3 B
FM08A	TRUCK BATT TO BATT MONITOR FUSE	HJ 3 D
FM_A5	FUSE AUX AC	HJ 2 B
FT01	FUSE ACM	CK 0 B
FT02A	FUSE, CLUTCH, POWER	DB 0 D
FT03	FUSE DISCONNECT SWITCH	AM 3 D
FT04	FUSE DISCONNECT SOLENOID	AM 2 D
FT05	FUSE DCU	CC 3 B
FT05	FUSE DCU	CN 3 B
G01	BATTERY	AB 4 B
G01	BATTERY	AE 1 D
G01	BATTERY	AF 2 C
G01	BATTERY	AL 0 D
G01	BATTERY	AM 1 D
G01	BATTERY	AN 0 D
G01	BATTERY	CC 4 A
G01	BATTERY	CK 0 A
G01	BATTERY	CM 4 C
G01	BATTERY	CN 4 A
G01	BATTERY	DB 0 E
G01	BATTERY	HI 2 B
G01	BATTERY	HJ 4 D
G01	BATTERY	ND 3 D
G01B	Battery Ring Battery 2	BL 2 B
G01C	Battery Ring Battery 3	BL 1 C
G01D	Battery 4	BL 1 D
G01E	BATTERY 1	BL 1 B
G01F	AUX BATTERY	HJ 2 C
G02	ALTERNATOR	AE 2 A
G02	ALTERNATOR	AF 2 C

REFERENCES

REF	DESCRIPTION	PAGE
G02	ALTERNATOR	AL 1 A
G02	ALTERNATOR	AM 1 D
G02	ALTERNATOR	AN 1 A
G03H	INVERTER 12VDC/120VAC	HI 0 B
G03J	INVERTER DISPLAY	HI 0 C
G04	POWER DISTRIBUTION UNIT, 120VAC	HC 1 B
G04	POWER DISTRIBUTION UNIT, 120VAC	HI 2 B
G05A	12V, DASH POWER OUTLET	IG 0 C
G05E	12V SOCKET, RADIO SHELF	IG 2 C
G05F	12V DASH POWER OUTLET	IG 0 C
G06A	12V STUDS, CB DASH	IG 3 D
G06B	12V STUDS, CB OVERHEAD	IG 2 D
H02A	HORN DUAL TONE 1	GQ 1 D
H02A_S	CITY HORN SERVICE	GQ 4 E
H03	BACKUP ALARM	GF 3 D
H03	BACKUP ALARM	GK 1 E
H05	Buzzer	IA 3 C
H16	METHANE FUME DETECTOR	CM 2 B
H17	METHANE DETECTION STATUS	CM 2 B
L_E10LED	LH LED TAIL LAMP	GF 0 C
M01	WINDSHIELD WIPER MOTOR	GP 2 D
M02	Motor, windscreen washer pump	GP 3 B
M04	MOTOR, STARTER	AE 1 B
M04	MOTOR, STARTER	AF 2 A
M04	MOTOR, STARTER	AL 0 B
M04	MOTOR, STARTER	AM 0 B
M04	MOTOR, STARTER	AN 0 B
M04A	MOTOR STARTER TC	AE 0 B
M04A	MOTOR STARTER TC	AF 3 A
M04B	MOTOR STARTER CUMMINS	AM 1 B
M06DS	Motor, Window Winder D.S.	IC 1 C
M06PS	Motor, Window Winder P.S.	IC 2 E
M18	MOTOR SINK PUMP	HE 0 D
M18	MOTOR SINK PUMP	HH 0 D
M20L	HEATED SEAT, LEFT	IB 1 D
M20R	HEATED SEAT, RIGHT	IB 2 D
M41	MOTOR PUMP UREA	CN 2 C
M55	Condensor Fan, Parking Cooler	HJ 0 D
M80L	Drivers Side Door Lock Control Assembly	IA 3 D
M80L	Drivers Side Door Lock Control Assembly	IF 1 D
M80LS	DRIVERS SIDE COURTESY LAMP SWITCH	IA 3 B
M80R	Passenger Side Door Lock Control Assembly	IA 3 D
M80R	Passenger Side Door Lock Control Assembly	IF 2 D
M80RS	PASSENGER SIDE COURTESY LAMP SWITCH	IA 4 D
M110L	Mirror Motors & Heater, LHS	IC 0 B
M110L	Mirror Motors & Heater, LHS	IE 1 C
M110R	Mirror Motors & Heater, RHS	IC 3 B
M110R	Mirror Motors & Heater, RHS	IE 3 C
MCDE2	DIAGNOSTIC CONNECTOR	BG 3 D
OBD		XA 2 D

REF	DESCRIPTION	PAGE
OBD-II	ON-BOARD-DIAGNOSTICS VENDEND	XF 3 D
R01A	Heater Engine Preheat 110V	CA 2 D
R05A	AIR DRYER	FA 3 C
R05C	AIR DRYER	FA 3 C
R08A	TERMINATION RESISTOR	CC 0 B
R08A	TERMINATION RESISTOR	CN 0 B
R08B	TERMINATING RESISTOR	EB 0 A
R08B	TERMINATING RESISTOR	EH 0 A
R08C	TERMINATING RESISTOR	XB 0 C
R08E	RESISTOR J1939 TERMINATION	JG 2 C
R08E	RESISTOR J1939 TERMINATION	JH 1 E
R08F	TERMINATION RESISTOR, CAN-BUS	BC 2 D
R08G	TERMINATING RESISTOR	BE 3 C
R08H	TERMINATING RESISTOR CAN 7	KH 3 B
R08H	TERMINATING RESISTOR CAN 7	XC 2 C
R08I	TERMINATING RESISTOR	CD 2 B
R08I	TERMINATING RESISTOR	CP 2 B
R08M	TERMINATING RESISTOR CAN-BUS	XA 0 C
R08N	TERMINATING RESISTOR, CAN-BUS	BI 3 B
R08N	TERMINATING RESISTOR, CAN-BUS	BM 2 A
R09	Heater, fuel filter	CE 2 C
R09B	HEATER, FUEL FILTER	CE 2 C
R15	Windscreen heater	IB 4 D
R18A	HEATER DRAIN VALVE	FA 0 C
R18B	HEATER DRAIN VALVE	FA 1 C
R21	Termination resistor	XA 0 B
R21	Termination resistor	XF 3 C
R21_TGW	TERMINATING RESISTOR TGW OVERLAY	BJ 2 B
R21A	TERMINATING RESISTOR DL10	XF 2 D
R21B	TERMINATING RESISTOR DL10	XF 1 C
R29	Heater, NOxCare tank to pump hose	CD 1 C
R29	Heater, NOxCare tank to pump hose	CK 4 D
R29	Heater, NOxCare tank to pump hose	CP 1 C
R30	HEATER, BACKFLOW HOSE	CD 2 C
R30	HEATER, BACKFLOW HOSE	CP 2 C
R31	Heater, NOxCare pump to injector hose	CD 1 C
R31	Heater, NOxCare pump to injector hose	CK 3 E
R31	Heater, NOxCare pump to injector hose	CP 1 C
R_E10LED	RH LED TAIL LAMP	GF 1 C
RE01	RELAY TRAILER STOP	AC 0 C
RE01	RELAY TRAILER STOP	MA 0 B
RE02	RELAY TRAILER CLEARANCE	AC 1 C
RE02	RELAY TRAILER CLEARANCE	MA 1 B
RE03	RELAY TRAILER MARKER	AC 1 C
RE03	RELAY TRAILER MARKER	MA 2 B
RE04	EFRC RELAY, EMS	AC 2 C
RE04	EFRC RELAY, EMS	AG 1 B
RE05	EFRC RELAY, IGN	AC 3 C
RE06	RELAY CAND CONDITIONER	AD 2 B
RE06	RELAY CAND CONDITIONER	BP 3 B

REFERENCES

REF	DESCRIPTION	PAGE
RE07	VOLVO FUEL COOLER CUMMINS DEF MODE	AD 3 B
RE07	VOLVO FUEL COOLER CUMMINS DEF MODE	BP 1 B
RE07	VOLVO FUEL COOLER CUMMINS DEF MODE	CC 1 B
RE07	VOLVO FUEL COOLER CUMMINS DEF MODE	CN 1 B
RE08	CES	AD 2 D
RE08	CES	CP 3 B
RE09	UREA HEATER TANK TO PUMP	AD 0 D
RE09	UREA HEATER TANK TO PUMP	CD 1 B
RE09	UREA HEATER TANK TO PUMP	CP 1 B
RE10	UREA HEATER PUMP TO INJ.	AD 1 D
RE10	UREA HEATER PUMP TO INJ.	CD 1 B
RE10	UREA HEATER PUMP TO INJ.	CP 1 B
RE11	UREA HEATER BACKFLOW	AD 1 D
RE11	UREA HEATER BACKFLOW	CD 2 B
RE11	UREA HEATER BACKFLOW	CP 2 B
RLY02	RELAY, POWER ACCESSORIES	AB 2 D
RLY03	RELAY DOOR ALARM	IA 3 C
RLY04	RELAY PARK BRAKE ALARM	IA 4 C
RLY05	RELAY, POWER IGNITION 1	AB 1 D
RLY06	RELAY RADIO WAKE	KE 0 B
RLY06	RELAY RADIO WAKE	KF 2 B
RLY06	RELAY RADIO WAKE	KG 0 B
RLY07	RELAY, PTO	DP 1 B
RLY08	RELAY, POWER IGNITION 2	AA 2 C
RLY10	RELAY, CITY HORN	GQ 1 C
RLY11	RELAY, DOME/ DOOR LAMPS	IA 2 C
RLY12	RELAY, INTERMITTENT WIPER	GP 0 B
RLY13	RELAY, AUTOSHIFT	DB 2 B
RLY13_1	RELAY, START ENABLE	DF 2 B
RLY13_3	RELAY NEUTRAL START I-SHIFT	AI 2 D
RLY14	Relay Lift Axle/ Reverse	FB 3 B
RLY14	Relay Lift Axle/ Reverse	GK 1 B
RLY15	RELAY REMOTE START ENABLE	BM 4 B
RLY16	RELAY, BODY BUILDER REMOTE THROTTLE INC	AH 2 C
RLY17	RELAY, BODY BUILDER REMOTE THROTTLE DE	AH 3 B
RLY23	RELAY, ER2 ALLISON BODY BUILDER	DF 4 B
RLY24	RELAY, ER1 ALLISON BODY BUILDER	DF 3 B
RLY26	SNOWPLOW LH ER4	GI 2 C
RLY27	SNOWPLOW RH ER9	GI 1 C
RLY28	SNOWPLOW LCM INPUT ER7	GI 3 C
RLY33B	RELAY, ER3 I-SHIFT POWER	DA 1 B
RLY34	RELAY, ER4 ECS POWER	EB 4 B
RLY34	RELAY, ER4 ECS POWER	EH 4 B
RLY38	RELAY, ROOF MARKER LAMPS, ER1	GC 2 B
RLY41	RELAY, PARK BRAKE	HB 4 C
RLYER5	RELAY, METHANE DETECT	CM 0 C
RLYER6	RELAY METHANE DETECTOR	CM 0 B
S01	Switch, main lighting, selector type	GA 1 C
S02	Stalk Switch, Full-Dipped Beams/ Cruise	AH 2 B
S02	Stalk Switch, Full-Dipped Beams/ Cruise	GA 2 B

REF	DESCRIPTION	PAGE
S04	SWITCH, CLIMATE FAN SELECTOR TYPE	HB 0 B
S05	SWITCH, INTERIOR LIGHTING	HD 0 B
S05	SWITCH, INTERIOR LIGHTING	HE 2 D
S05	SWITCH, INTERIOR LIGHTING	HH 2 D
S06	SWITCHES, WINDSHIELD WIPER/CLUSTER STALK	BA 1 C
S06	SWITCHES, WINDSHIELD WIPER/CLUSTER STALK	GP 0 C
S07	SWITCH, ENGINE BRAKE SELECTOR TYPE	AJ 3 D
S07B	SWITCH, ENGINE BRAKE ON/OFF	AJ 2 B
S08	SWITCH, DIFFERENTIAL GEAR LOCK, INTERWHEE	FD 1 B
S09	SWITCH, DIFFERENTIAL GEAR LOCKS, INTERA	FD 2 B
S11A	SWITCH, LIFT AXLE	FB 0 C
S11B	SWITCH, LIFT AXLE	FB 1 C
S11C	SWITCH, LIFT AXLE	FB 2 C
S11D	SWITCH, AIR SUSPENSION MANUAL CONTROL ON/	EB 2 D
S11D	SWITCH, AIR SUSPENSION MANUAL CONTROL ON/	EH 2 D
S11E	SWITCH, SUSP. CTRL. UP/DOWN	EB 3 D
S11E	SWITCH, SUSP. CTRL. UP/DOWN	EH 3 D
S11F	LOAD DISTRIBUTION SWITCH	EH 3 B
S12	SWITCH, SNOWPLOW LAMP	GI 2 B
S14A	Switch, City Horn/Air Horn	GQ 1 C
S15	SWITCH, IGNITION	AB 1 B
S24	SWITCH, STALK, ENGINE BRAKE	AJ 2 D
S24A	STALK SWITCH, RETARDER, ALLISON	DE 4 D
S24C	SWITCH, ON/OFF RETARDER, ALLISON	DE 4 C
S24D	SWITCH STALK ENGINE BRAKE	AJ 1 D
S28A	SWITCH, PTO (POWER TAKE-OFF)	DP 2 C
S28B	SWITCH, PTO (POWER TAKE-OFF)	DP 3 C
S28C	SWITCH, PTO (POWER TAKE-OFF)	DP 4 C
S28J	SWITCH, DUAL PTO ISHIFT	BI 2 B
S28J	SWITCH, DUAL PTO ISHIFT	BM 1 B
S31	SWITCH, TCS (TRACTION CONTROL SYSTEM)	EA 3 B
S31	SWITCH, TCS (TRACTION CONTROL SYSTEM)	EC 4 B
S31	SWITCH, TCS (TRACTION CONTROL SYSTEM)	EG 3 B
S41	Switch, battery main switch control	AM 2 C
S43	PRESSURE SWITCH, PARKING BRAKE INDICATOR,	AH 4 D
S43A	SWITCH, PRESSURE PARK BRAKE, N.C.	DF 2 E
S43B	PRESSURE SWITCH, PARK BRAKE N.C.	DB 2 D
S43C	TRAILER PARK DETECTION SWITCH, N.C.	GA 3 B
S45BA	EATON	BB 2 B
S45BB	VOLVO	BB 1 B
S45BC	ROCKWELL	BB 2 B
S047	SW. IWDL FRONT ENGAGED	BB 3 B
S047A	SW. IWDL 3RD AXLE. ENGAGED	BB 3 B
S48	Pressure switch, brake light, NO.	GB 3 D
S048B	SW. IWDL REAR-REAR ENGAGED	BB 4 B
S49	Position switch, reverse lamps, NO.	GK 2 B
S58	Position Switch, Clutch Pedal	AI 3 B
S59	Position switch, brake pedal, NO.	AI 3 C
S61A	Position Switch, Seat Belt Lock, NO	IB 0 D
S75	SWITCH, BEACON WARNING LIGHT	GJ 1 B

REFERENCES

REF	DESCRIPTION	PAGE
S76	SWITCH, SPOTLIGHTS	GG 1 C
S80	DOOR LOCK CONTROL MODULE	IF 1 B
S80D	Driver Side Door Control Panel	IC 2 B
S80P	Passenger Side Door Control Panel	IC 2 D
S87	SWITCH SINK/ FAUCET	HE 0 C
S87	SWITCH SINK/ FAUCET	HH 0 C
S88	SWITCH, 5th WHEEL SLIDE	FC 2 B
S89	Position switch, Hood tilt	BM 4 B
S93	SWITCH, SUSPENSION DUMP	FC 0 B
S97	SWITCH, INSIDE/OUTSIDE AIR CLEANER	CH 2 B
S101	Position switch, gear box neutral positi	DB 1 C
S104	SWITCH, MARKER INTERRUPT	JD 2 C
S104A	SWITCH, AUX 1	NA 1 C
S104B	SWITCH, AUX 2	NA 2 C
S104C	SWITCH, AUX 3	NA 3 C
S104D	SWITCH, AUX 4	NA 4 C
S121	SWITCH, TOUCH LOCK	FF 1 C
S169	Switch, Battery Main	AB 4 A
S169	Switch, Battery Main	AF 2 B
S169	Switch, Battery Main	AM 1 C
S169	Switch, Battery Main	HI 2 B
S169A	SWITCH BATTERY BI-STABLE	AM 3 C
S171	SWITCH, GEAR LEVER I-SHIFT	DA 1 D
S171A	SWITCH GEAR LEVER I-SHIFT PUSH BUTTON	DA 3 D
S171B	Solenoid, B 5th Wheel Release	FF 3 D
S202	Switch, LDWS, Lane Departure Warning Sys	JG 3 C
S202	Switch, LDWS, Lane Departure Warning Sys	JH 1 B
S212	SWITCH HILL ASSIST	EC 1 D
S212	SWITCH HILL ASSIST	EG 4 B
S223	SWITCH, ECO ROLL	AH 1 E
S234	Switch, Heated Windshield	IB 3 B
S316	SWITCH ENGINE START ENABLE REAR	BM 3 B
SK141A	SPLICE PACK, ILLUMINATION	DA 1 A
SK141A	SPLICE PACK, ILLUMINATION	DB 1 A
SK141A	SPLICE PACK, ILLUMINATION	DP 2 A
SK141A	SPLICE PACK, ILLUMINATION	EB 4 A
SK141A	SPLICE PACK, ILLUMINATION	EH 4 A
SK141A	SPLICE PACK, ILLUMINATION	FB 0 A
SK141A	SPLICE PACK, ILLUMINATION	FC 0 A
SK141A	SPLICE PACK, ILLUMINATION	FD 1 A
SK141A	SPLICE PACK, ILLUMINATION	GB 0 A
SK141A	SPLICE PACK, ILLUMINATION	HB 0 A
SK141A	SPLICE PACK, ILLUMINATION	JD 2 A
SK141A	SPLICE PACK, ILLUMINATION	JH 1 A
SK141B	SPLICE PACK, ILLUMINATION	CH 2 A
SK141B	SPLICE PACK, ILLUMINATION	DE 4 A
SK141B	SPLICE PACK, ILLUMINATION	EA 3 A
SK141B	SPLICE PACK, ILLUMINATION	EC 3 A
SK141B	SPLICE PACK, ILLUMINATION	EG 3 A
SK141B	SPLICE PACK, ILLUMINATION	GB 1 A

REF	DESCRIPTION	PAGE
SK141B	SPLICE PACK, ILLUMINATION	GI 2 A
SKX03D	SPLICE PACK	AE 3 C
SKX03D	SPLICE PACK	BD 1 D
SKX03D	SPLICE PACK	CM 0 D
SKX03D	SPLICE PACK	GB 1 D
SKX03D	SPLICE PACK	IB 1 D
SKX03F_A	SPLICE PACK	AA 3 C
SKX03F_A	SPLICE PACK	AB 0 E
SKX03F_A	SPLICE PACK	AE 3 B
SKX03F_A	SPLICE PACK	DF 4 C
SKX03F_A	SPLICE PACK	DP 2 D
SKX03F_A	SPLICE PACK	EB 4 D
SKX03F_A	SPLICE PACK	EH 4 D
SKX03F_A	SPLICE PACK	GI 1 E
SKX03F_A	SPLICE PACK	IA 4 C
SKX03F_A	SPLICE PACK	IB 2 D
SKX03F_A	SPLICE PACK	IF 2 D
SKX03F_A	SPLICE PACK	JG 2 D
SKX03F_A	SPLICE PACK	JH 0 E
SKX03F_A	SPLICE PACK	KE 0 C
SKX03F_A	SPLICE PACK	KF 1 B
SKX03F_A	SPLICE PACK	KG 0 B
SKX03F_B	SPLICE PACK	AE 4 B
SKX03F_B	SPLICE PACK	BH 0 E
SKX03F_B	SPLICE PACK	CH 2 D
SKX03F_B	SPLICE PACK	FB 3 D
SKX03F_B	SPLICE PACK	FC 0 E
SKX03F_B	SPLICE PACK	FD 0 E
SKX03F_B	SPLICE PACK	GK 2 C
SKX03F_B	SPLICE PACK	IC 1 E
TC01	J560 PLUG, 7 PIN	MA 0 D
TC02	J560 PLUG, 7 PIN	MA 2 D
TC03	J560 RECEPTACLE WITH QCS2, 7 PIN	MB 2 B
TC04	J560 PLUG, 7 PIN	MB 2 C
TC05	J560 PLUG, 7 PIN	MB 2 D
TC06	J560 PLUG, 7 PIN	MB 3 C
TC07	J560 PLUG, 7 PIN	MB 3 D
TC08	J560 RECEPTACLE WITH QCS2, 7 PIN	MB 1 D
U01	STUD, POWER 1	AA 1 A
U01	STUD, POWER 1	AB 3 B
U01	STUD, POWER 1	CD 1 A
U01	STUD, POWER 1	CP 1 A
U01	STUD, POWER 1	DB 1 C
V23	Diode, Water heater	CA 3 B
X02	STUD, ENGINE BLOCK	AE 2 C
X02	STUD, ENGINE BLOCK	AL 1 C
X02	STUD, ENGINE BLOCK	AN 1 C
X02	STUD, ENGINE BLOCK	CC 4 B
X02	STUD, ENGINE BLOCK	CL 3 B
X02	STUD, ENGINE BLOCK	CN 4 B

REFERENCES

REF	DESCRIPTION	PAGE
X02	STUD, ENGINE BLOCK	HA 0 E
X03	STUD, CAB	AE 3 D
X03	STUD, CAB	AG 1 D
X03	STUD, CAB	AL 1 D
X03	STUD, CAB	AN 2 D
X03	STUD, CAB	CB 1 D
X07B	12V SOCKET, PANEL	IG 3 C
X07C	Socket, 12V	IG 4 C
X07D	12V SOCKET TV/VCR	HD 1 C
X07D	12V SOCKET TV/VCR	HE 1 C
X07D	12V SOCKET TV/VCR	HH 2 C
X07H	12V SOCKET COOLER P.S.	IG 3 C
X07K	12V SOCKET, PANEL	IG 4 C
X11	Connector, Engine	CB 1 C
X11A	CONNECTORS CUMMINS ISX-G ENGINE INTERFACE	CL 1 C
X17A	Auxiliary Connector 1	NA 1 C
X17A1	CONNECTOR INTERNAL AUX SW POWER 1	NA 1 D
X17B	Auxiliary Connector 2	NA 2 C
X17B1	CONNECTOR INTERNAL AUX SW POWER 2	NA 2 D
X17C	Auxiliary Connector 3	NA 3 C
X17C1	CONNECTOR INTERNAL AUX SW POWER 3	NA 3 D
X17D	Auxiliary Connector 4	NA 4 C
X24	Socket, +12V Accessories power supply	HE 4 D
X45	Receptacle Engine Heater 110V	CA 2 B
X62	Connector, Tail lift preparation	ND 3 A
X62A	CONNECTOR LIFT GATE	ND 3 A
X66	Connector, USB, Audio	KD 1 C
X67	Connector, AUX, Audio	KD 1 B
X87	Connector, Cummins Crossover (14 way)	CP 4 D
X89	Connector, Water-in-fuel Sensor	CD 0 C
X89	Connector, Water-in-fuel Sensor	CP 0 C
X147B	CONNECTOR RS232	JH 4 C
X192	CONNECTOR CUMMINS CES	CP 2 D
Y11	ABS VALVE LH 1ST AXLE	EA 1 B
Y11	ABS VALVE LH 1ST AXLE	EC 1 B
Y11	ABS VALVE LH 1ST AXLE	EG 1 B
Y12	ABS VALVE RH 1ST AXLE	EA 0 B
Y12	ABS VALVE RH 1ST AXLE	EC 0 B
Y12	ABS VALVE RH 1ST AXLE	EG 0 B
Y13	ABS VALVE LH 2ND AXLE	EA 2 D
Y13	ABS VALVE LH 2ND AXLE	EC 1 B
Y13	ABS VALVE LH 2ND AXLE	EG 1 B
Y14	ABS VALVE RH 2ND AXLE	EA 1 D
Y14	ABS VALVE RH 2ND AXLE	EC 0 E
Y14	ABS VALVE RH 2ND AXLE	EG 0 E
Y15	ABS VALVE LH 3RD AXLE	EA 4 D
Y15	ABS VALVE LH 3RD AXLE	EC 2 D
Y15	ABS VALVE LH 3RD AXLE	EG 2 E
Y16	ABS VALVE RH 3RD AXLE	EA 3 D
Y16	ABS VALVE RH 3RD AXLE	EC 2 D

REF	DESCRIPTION	PAGE
Y16	ABS VALVE RH 3RD AXLE	EG 2 E
Y18A	SOLENOID VALVE, SINGLE PTO	DP 1 D
Y18B	SOLENOID VALVE, DUAL PTO ENGINE MOUNTED	DP 4 D
Y18G	SOLENOID TRANS. PTO 1	DA 3 B
Y18G	SOLENOID TRANS. PTO 1	DP 0 D
Y18H	SOLENOID TRANS PTO 2	DA 3 B
Y18H	SOLENOID TRANS PTO 2	DP 0 B
Y25A	SOLENOID, LEVEL CONTROL DRIVE AXLES	EB 1 B
Y25A	SOLENOID, LEVEL CONTROL DRIVE AXLES	EH 1 A
Y29A	SOLENOID, LEVEL CONTROL AUX. AXLE	EB 2 B
Y29A	SOLENOID, LEVEL CONTROL AUX. AXLE	EH 2 A
Y35	Solenoid, Engine Fan	CB 2 B
Y35	Solenoid, Engine Fan	CC 0 A
Y35	Solenoid, Engine Fan	CL 3 E
Y35	Solenoid, Engine Fan	CN 1 A
Y35A	SOLENOID ENGINE FAN	CC 1 B
Y35A	SOLENOID ENGINE FAN	CN 1 B
Y35E	SOLENOID, ENGINE FAN E-VISCO	CL 3 D
Y42	Clutch, magnetic, air conditioning compr	HA 1 D
Y51	Solenoid valve, Air dryer	FA 4 C
Y53	SOLENOID, ETHER START	CA 0 C
Y57	SOLENOID VALVE, TRAC CONTROL	EA 1 D
Y57	SOLENOID VALVE, TRAC CONTROL	EC 3 D
Y57	SOLENOID VALVE, TRAC CONTROL	EG 3 D
Y57A	SOLENOID VALVE, TRAC CONTROL ESP	ED 0 C
Y64	Solenoid, Retarder Air Accumlator	DE 1 B
Y80	Solenoid valve, AdBlue dosing unit	CK 3 B
Y80A	Solenoid valve, AdBlue dosing unit	CD 0 C
Y81	Solenoid valve, urea heating tank	CK 2 D
Y81A	Solenoid valve, urea heating tank	CD 1 C
Y81A	Solenoid valve, urea heating tank	CP 1 C
Y100	SOLENOID VALVE TRAILER ABS_ESP	ED 4 C
Y106	SOLENOID HILL ASSIST BRAKE	EC 3 D
Y106	SOLENOID HILL ASSIST BRAKE	EG 3 D
Y110	SOLENOID VALVE, OIL THERMOSTAT	DA 4 C
Z01	VEHICLE DIAGNOSTICS	XA 0 B
Z02	TRAILER CONNECTION, 7-POLE UNIT, 24N	MA 3 C
Z03A	BODY BUILDER CONNECTOR #1	BH 0 C
Z03B	BODY BUILDER CONNECTOR #2	BH 2 B
Z03C	BODY BUILDER CONNECTOR #3	BI 1 D
Z03C	BODY BUILDER CONNECTOR #3	BM 1 D
Z03D	BODY BUILDER CONNECTOR #4	BI 3 D
Z03D	BODY BUILDER CONNECTOR #4	BM 3 D
Z04	BODY BUILDER CAMERA PREP	BH 1 B
Z05	Solenoid Pack	CH 3 D
Z05	Solenoid Pack	FB 1 D
Z05	Solenoid Pack	FC 3 D
Z05	Solenoid Pack	FD 2 D
Z05	Solenoid Pack	FF 1 D
Z05	Solenoid Pack	GQ 2 C

REFERENCES

REF	DESCRIPTION	PAGE
Z06	STEERING WHEEL CONTACT REEL	BB 1 E
Z06	STEERING WHEEL CONTACT REEL	GA 3 B
Z06	STEERING WHEEL CONTACT REEL	JA 1 D
Z08	CONNECTOR, ROAD RELAY	BC 0 C
Z10	ONBOARD DIAGNOSTIC CONNECTOR VENDOR ENGIN	XF 2 D
Z10CA	OPTION CONNECTOR A, CAB SIDE	BH 2 D
Z10CB	OPTION CONNECTOR B, CAB SIDE	BH 3 D
Z10FA	OPTION CONNECTOR A, CHASSIS SIDE	BH 2 D
Z10FB	OPTION CONNECTOR B, CHASSIS SIDE	BH 3 D
Z13	OPTION CONNECTOR, SNOWPLOW LIGHTS	GI 1 D
Z15	CONNECTOR, BODYBUILDER - CAB SIDE	BH 1 E

REF	DESCRIPTION	PAGE
Z16	CONNECTOR, BODYBUILDER	BH 1 D
Z17	RECEPTACLE, 120VAC	HC 1 D
Z17	RECEPTACLE, 120VAC	HI 2 D
Z18	RECEPTACLE, D.S. CABINET	HC 1 D
Z18	RECEPTACLE, D.S. CABINET	HI 3 C
Z19	RECEPTACLE, P.S. CABINET	HC 2 D
Z19	RECEPTACLE, P.S. CABINET	HI 3 C
Z20	RECEPTACLE, UNDER BUNK/ TABLE	HC 2 D
Z20	RECEPTACLE, UNDER BUNK/ TABLE	HI 4 C
Z21	QUALCOMM OMNIVISION PREP KIT	BE 2 C
Z23	CONNECTOR TGW2 PROGRAM	BJ 2 A